HEATER & AIR CONDITIONER

SECTION HA

CONTENTS

PRECAUTIONS AND PREPARATION 2
Supplemental Restraint System (SRS) "AIR BAG" (Dual Air Bag System) 2
Supplemental Restraint System (SRS) "AIR BAG" (Single Air Bag System) 2
Precautions for Working with HFC-134a (R-134a) 3
General Refrigerant Precautions 3
Precautions for Refrigerant Connection 4
Precautions for Servicing Compressor 5
Special Service Tools 5
HFC-134a (R-134a) Service Tools and Equipment 6
Precautions for Service Equipment 8
DESCRIPTION 10
Refrigeration Cycle 10
Component Layout 11
Discharge Air Flow 12
Control Operation 13
TROUBLE DIAGNOSES 14
Contents 14
Wiring Diagram — HEATER — 36
Wiring Diagram — A/C — 38
SERVICE PROCEDURES 66
HFC-134a (R-134a) Service Procedure 66
Maintenance of Lubricant Quantity in Compressor 68
Refrigerant Lines 70
Compressor Mounting 75
Belt Tension 76
Fast Idle Control Device (FICD) 76
Compressor — Model DKV-11D and DKV-14D (ZEXEL make) 77
Compressor Clutch 77
Thermal Protector 80
Compressor — Model CR-14 (Calsonic make) 80
Compressor Clutch 80
Thermal Protector 82
Ventilation Air Filter 83
SERVICE DATA AND SPECIFICATIONS (SDS) 84
General Specifications 84
Inspection and Adjustment 84

When you read wiring diagrams:
- **Read GI section, "HOW TO READ WIRING DIAGRAMS".**
- **See EL section, "POWER SUPPLY ROUTING" for power distribution circuit.**

When you perform trouble diagnoses, read GI section, "HOW TO FOLLOW FLOW CHART IN TROUBLE DIAGNOSES" and "HOW TO PERFORM EFFICIENT DIAGNOSIS FOR AN ELECTRICAL INCIDENT".

Supplemental Restraint System (SRS) "AIR BAG" (Dual Air Bag System)

The Supplemental Restraint System "Air Bag" used along with a seat belt, helps to reduce the risk or severity of injury to the driver and front passenger in a frontal collision. The Supplemental Restraint System consists of air bag modules (located in the center of the steering wheel and on the instrument panel on the passenger side), a diagnosis sensor unit, warning lamp, wiring harness and spiral cable. Information necessary to service the system safely is included in the **RS section** of this Service Manual.

WARNING:

- **To avoid rendering the SRS inoperative, which could increase the risk of personal injury or death in the event of a collision which would result in air bag inflation, all maintenance must be performed by an authorized NISSAN dealer.**
- **Improper maintenance, including incorrect removal and installation of the SRS, can lead to personal injury caused by unintentional activation of the system.**
- **Do not use electrical test equipment on any circuit related to the SRS unless instructed to in this Service Manual. SRS wiring harnesses are covered with yellow insulation either just before the harness connectors or for the complete harness, for easy identification.**

Supplemental Restraint System (SRS) "AIR BAG" (Single Air Bag System)

The Supplemental Restraint System "Air Bag" and used along with a seat belt, helps to reduce the risk or severity of injury to the driver in a frontal collision. The Supplemental Restraint System consists of an air bag module (located in the center of the steering wheel), a diagnosis sensor unit, warning lamp, wiring harness and spiral cable. Information necessary to service the system safely is included in the **RS section** of this Service Manual.

WARNING:

- **To avoid rendering the SRS inoperative, which could increase the risk of personal injury or death in the event of a collision which would result in air bag inflation, all maintenance must be performed by an authorized NISSAN dealer.**
- **Improper maintenance, including incorrect removal and installation of the SRS, can lead to personal injury caused by unintentional activation of the system.**
- **Do not use electrical test equipment on any circuit related to the SRS unless instructed to in this Service Manual.**

Precautions for Working with HFC-134a (R-134a)

WARNING:

- CFC-12 (R-12) refrigerant and HFC-134a (R-134a) refrigerant are not compatible. These refrigerants must never be mixed, even in the smallest amounts. If the refrigerants are mixed, compressor failure is likely to occur.
- Use only specified lubricant for the HFC-134a (R-134a) A/C system and HFC-134a (R-134a) components. If lubricant other than that specified is used, compressor failure is likely to occur.
- The specified HFC-134a (R-134a) lubricant rapidly absorbs moisture from the atmosphere. The following handling precautions must be observed:
  - a: When removing refrigerant components from a vehicle, immediately cap (seal) the component to minimize the entry of moisture from the atmosphere.
  - b: When installing refrigerant components to a vehicle, do not remove the caps (unseal) until just before connecting the components. Connect all refrigerant loop components as quickly as possible to minimize the entry of moisture into system.
  - c: Only use the specified lubricant from a sealed container. Immediately reseal containers of lubricant. Without proper sealing, lubricant will become moisture saturated and should not be used.
  - d: Avoid breathing A/C refrigerant and lubricant vapor or mist. Exposure may irritate eyes, nose and throat. Remove R-134a from the A/C system, using certified service equipment meeting requirements of SAE J2210 (R-134a recycling equipment), or J2209 (R-134a recovery equipment). If accidental system discharge occurs, ventilate work area before resuming service. Additional health and safety information may be obtained from refrigerant and lubricant manufacturers.
  - e: Do not allow lubricant (Nissan A/C System Oil Type S) to come in contact with styrofoam parts. Damage may result.

General Refrigerant Precautions

WARNING:

- Do not release refrigerant into the air. Use approved recovery/recycling equipment to capture the refrigerant every time an air conditioning system is discharged.
- Always wear eye and hand protection (goggles and gloves) when working with any refrigerant or air conditioning system.
- Do not store or heat refrigerant containers above 52°C (125°F).
- Do not heat a refrigerant container with an open flame; if container warming is required, place the bottom of the container in a warm pail of water.
- Do not intentionally drop, puncture, or incinerate refrigerant containers.
- Keep refrigerant away from open flames: poisonous gas will be produced if refrigerant burns.
- Refrigerant will displace oxygen, therefore be certain to work in well ventilated areas to prevent suffocation.
- Do not introduce compressed air to any refrigerant container or refrigerant component.

Precautions for Refrigerant Connection

WARNING:
Make sure all refrigerant is discharged into the recycling equipment and the pressure in the system is less than atmospheric pressure. Then gradually loosen the discharge side hose fitting and remove it.
CAUTION:
When replacing or cleaning refrigerant cycle components, observe the following.

- **When the compressor is removed, store it in the same position as it is when mounted on the car. Failure to do so will cause lubricant to enter the low pressure chamber.**
- **When connecting tubes, always use a torque wrench and a back-up wrench.**
- **After disconnecting tubes, immediately plug all openings to prevent entry of dirt and moisture.**
- **When installing an air conditioner in the vehicle, connect the pipes as the final stage of the operation. Do not remove the seal caps of pipes and other components until just before required for connection.**
- **Allow components stored in cool areas to warm to working area temperature before removing seal caps. This prevents condensation from forming inside A/C components.**
- **Thoroughly remove moisture from the refrigeration system before charging the refrigerant.**
- **Always replace used O-rings.**
- **When connecting tube, apply lubricant to portions shown in illustration. Be careful not to apply lubricant to threaded portion.**
  Lubricant name: Nissan A/C System Oil Type R
  Part number: KLH00-PAGR0
- **O-ring must be closely attached to inflated portion of tube.**
- **After inserting tube into union until O-ring is no longer visible, tighten nut to specified torque.**
- **After connecting line, conduct leak test and make sure that there is no leakage from connections. When the gas leaking point is found, disconnect that line and replace the O-ring. Then tighten connections of seal seat to the specified torque.**

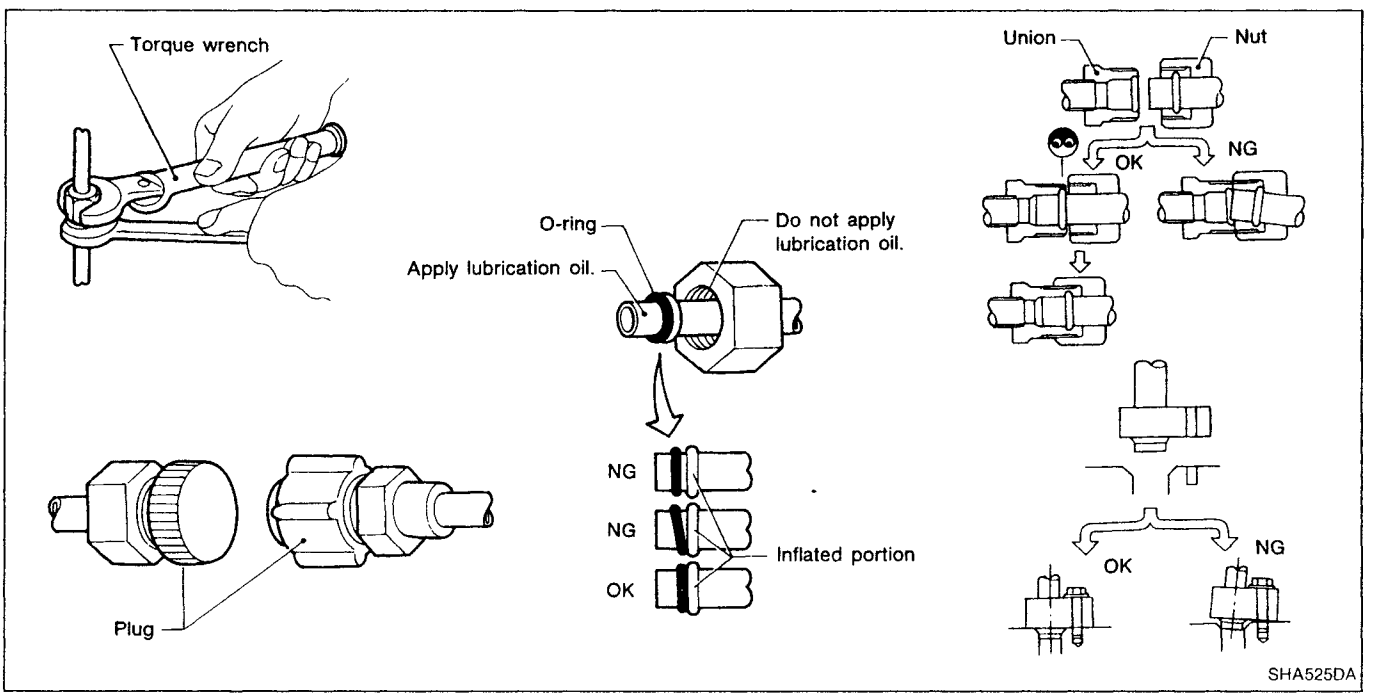

Precautions for Servicing Compressor

- **Plug all openings to prevent moisture and foreign matter from entering.**
- **When the compressor is removed, store it in the same position as it is when mounted on the car.**
- **When replacing or repairing compressor, follow "Maintenance of Lubricant Quantity in Compressor" exactly. Refer to HA-68.**
- **Keep friction surfaces between clutch and pulley clean. If the surface is contaminated, with lubricant, wipe it off by using a clean waste cloth moistened with thinner.**
- **After compressor service operation, turn the compressor shaft by hand more than five turns in both directions. This will equally distribute lubricant inside the compressor. After the compressor is installed, let the engine idle and operate the compressor for one hour.**
- **After replacing the compressor magnet clutch, apply voltage to the new one and check for normal operation.**

Special Service Tools

DKV-11D and DKV-14D compressors

Tool number Tool name	Description	
KV99231260 Clutch disc wrench	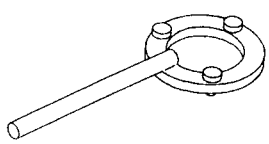 NT204	Removing shaft nut and clutch disc
KV99232340 Clutch disc puller	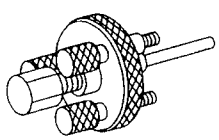 NT206	Removing clutch disc
KV99234330 Pulley installer	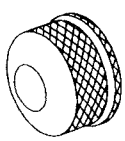 NT207	Installing pulley
KV99233130 Center pulley puller	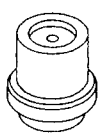 NT208	Removing pulley

HA

Special Service Tools (Cont'd)

CR-14 compressor

Tool number Tool name	Description	
KV99106700 Clutch disc wrench	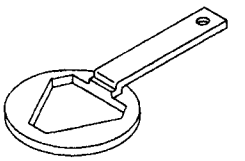 NT351	Removing shaft nut and clutch disc
KV99106800 Pulley installer	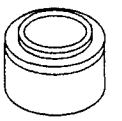 NT352	Installing pulley

HFC-134a (R-134a) Service Tools and Equipment

Never mix HFC-134a refrigerant and/or its specified lubricant with CFC-12 (R-12) refrigerant and/or its lubrication oil.
Separate and non-interchangeable service equipment must be used for each type of refrigerant/lubricant.
Refrigerant container fittings, service hose fittings and service equipment fittings (equipment which handles refrigerant and/or lubricant) are different between CFC-12 (R-12) and HFC-134a (R-134a). This is to avoid mixed use of the refrigerants/lubricant.
Adapters that convert one size fitting to another must never be used: refrigerant/lubricant contamination will occur and compressor failure will result.

Tool name	Description	Note
HFC-134a (R-134a) refrigerant	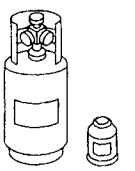 NT196	Container color: Light blue Container marking: HFC-134a (R-134a) Fitting size: Thread size • large container 1/2"-16 ACME
Nissan A/C System Oil Type R (Part No.: KLH00-PAGR0)	 NT197	Type: Poly alkyline glycol oil (PAG), type R Application: HFC-134a (R-134a) vane rotary compressors (Nissan only) Lubricity: 40 mℓ (1.4 Imp fl oz)
Recovery/Recycling/ Recharging equipment	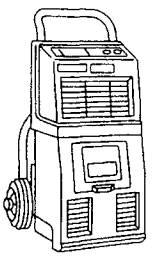 NT195	Function: Refrigerant Recovery and Recycling and Recharging

HFC-134a (R-134a) Service Tools and Equipment (Cont'd)

Tool name	Description	Note
Electrical leak detector	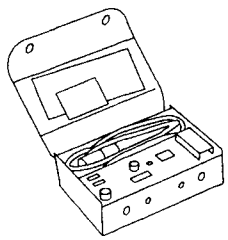 NT198	Power supply: ● DC 12 V (Cigarette lighter)
Manifold gauge set (with hoses and couplers)	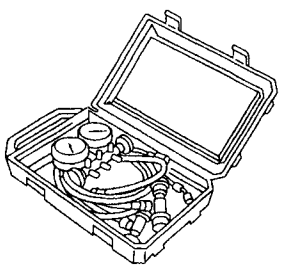 NT199	Identification: ● The gauge face indicates R-134a. Fitting size: Thread size ● 1/2"-16 ACME
Service hoses ● High side hose ● Low side hose ● Utility hose	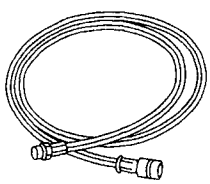 NT201	Hose color: ● Low hose: Blue with black stripe ● High hose: Red with black stripe ● Utility hose: Yellow with black stripe or green with black stripe Hose fitting to gauge: ● 1/2"-16 ACME
Service couplers ● High side coupler ● Low side coupler	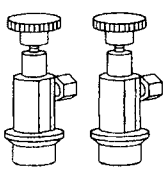 NT202	Hose fitting to service hose: ● M14 x 1.5 fitting is optional or permanently attached.
Refrigerant weight scale	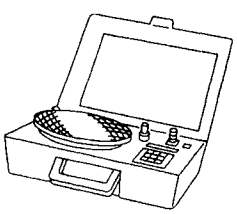 NT200	For measuring of refrigerant Fitting size: Thread size ● 1/2"-16 ACME
Vacuum pump (Including the isolator valve)	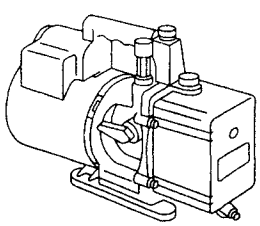 NT203	Capacity: ● Air displacement: 4 CFM ● Micron rating: 20 microns ● Oil capacity: 482 g (17 oz) Fitting size: Thread size ● 1/2"-16 ACME

HA

Precautions for Service Equipment

RECOVERY/RECYCLING/RECHARGING EQUIPMENT

Be certain to follow the manufacturers instructions for machine operation and machine maintenance. Never introduce any refrigerant other than that specified into the machine.

ELECTRONIC LEAK DETECTOR

Be certain to follow the manufactures instructions for tester operation and tester maintenance.

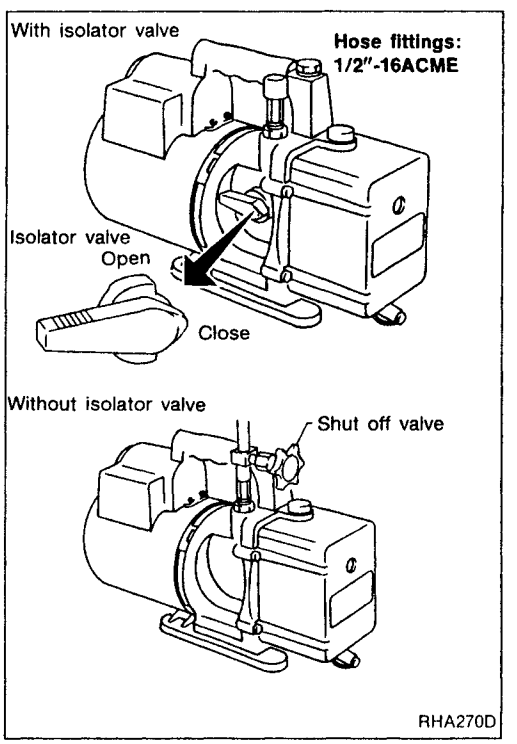

VACUUM PUMP

The lubricant contained inside the vacuum pump is not compatible with the specified lubricant for HFC-134a (R-134a) A/C systems. The vent side of the vacuum pump is exposed to atmospheric pressure. So the vacuum pump lubricant may migrate out of the pump into the service hose. This is possible when the pump is switched off after evacuation (vacuuming) and hose is connected to it.

To prevent this migration, use a manual valve placed near the hose-to-pump connection, as follows.

- Usually vacuum pumps have a manual isolator valve as part of the pump. Close this valve to isolate the service hose from the pump.
- For pumps without an isolator, use a hose equipped with a manual shut-off valve near the pump end. Close the valve to isolate the hose from the pump.
- If the hose has an automatic shut off valve, disconnect the hose from the pump. As long as the hose is connected, the valve is open and lubricating oil may migrate.

Some one-way valves open when vacuum is applied and close under a no vacuum condition. Such valves may restrict the pump's ability to pull a deep vacuum and are not recommended.

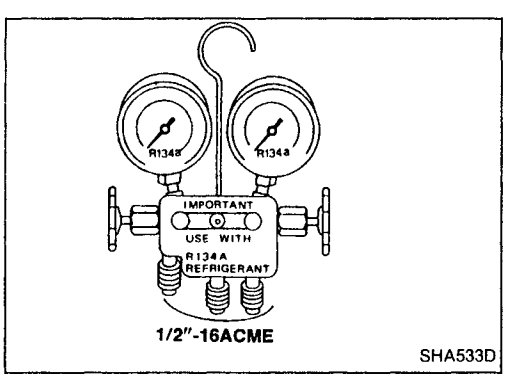

MANIFOLD GAUGE SET

Be certain that the gauge face indicates R-134a or 134a. Be sure the gauge set has 1/2''-16 ACME threaded connections for service hoses. Confirm the set has been used only with refrigerant HFC-134a (R-134a) and specified lubricants.

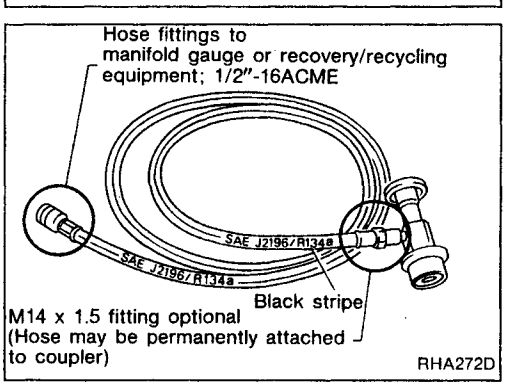

SERVICE HOSES

Be certain that the service hoses display the markings described (colored hose with black stripe). All hoses must include positive shut off devices (either manual or automatic) near the end of the hoses opposite the manifold gauge.

Precautions for Service Equipment (Cont'd)

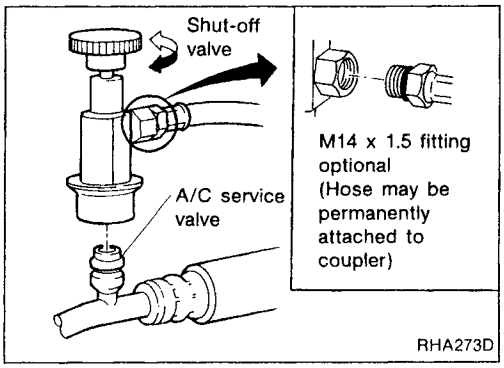

SERVICE COUPLERS

Never attempt to connect HFC-134a (R-134a) service couplers to an CFC-12 (R-12) A/C system. The HFC-134a (R-134a) couplers will not properly connect to the CFC-12 (R-12) system. However, if an improper connection is attempted, discharging and contamination may occur.

Shut off valve rotation	A/C service valve
Clockwise	Open
Counterclockwise	Close

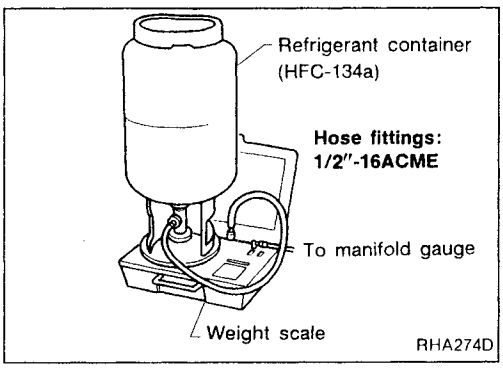

REFRIGERANT WEIGHT SCALE

Verify that no refrigerant other than HFC-134a (R-134a) and specified lubricants have been used with the scale. If the scale controls refrigerant flow electronically, the hose fitting must be 1/2''-16 ACME.

CHARGING CYLINDER

Using a charging cylinder is not recommended. Refrigerant may be vented into air from cylinder's top valve when filling the cylinder with refrigerant. Also, the accuracy of the cylinder is generally less than that of an electronic scale or of quality recycle/recharge equipment.

Refrigeration Cycle

REFRIGERANT FLOW

The refrigerant flow is in the standard pattern. Refrigerant flows through the compressor, condenser, liquid tank, evaporator and back to the compressor.
The refrigerant evaporation through the evaporator coil is controlled by an externally equalized expansion valve, located inside the evaporator case.

FREEZE PROTECTION

The compressor cycles on and off to maintain the evaporator temperature within a specified range. When the evaporator coil temperature falls below a specified point, the thermo control amplifier interrupts the compressor operation. When the evaporator coil temperature rises above the specification, the thermo control amplifier allows compressor operation.

REFRIGERANT SYSTEM PROTECTION

Dual-pressure switch

The dual-pressure switch is located on the liquid tank. If the system pressure rises or falls out of specifications, the switch opens to interrupt compressor clutch operation.

Fusible plug

Open at temperature above 105°C (221°F), thereby discharging refrigerant to the atmosphere. If this plug is melted and opened, check the refrigerant line and replace liquid tank.

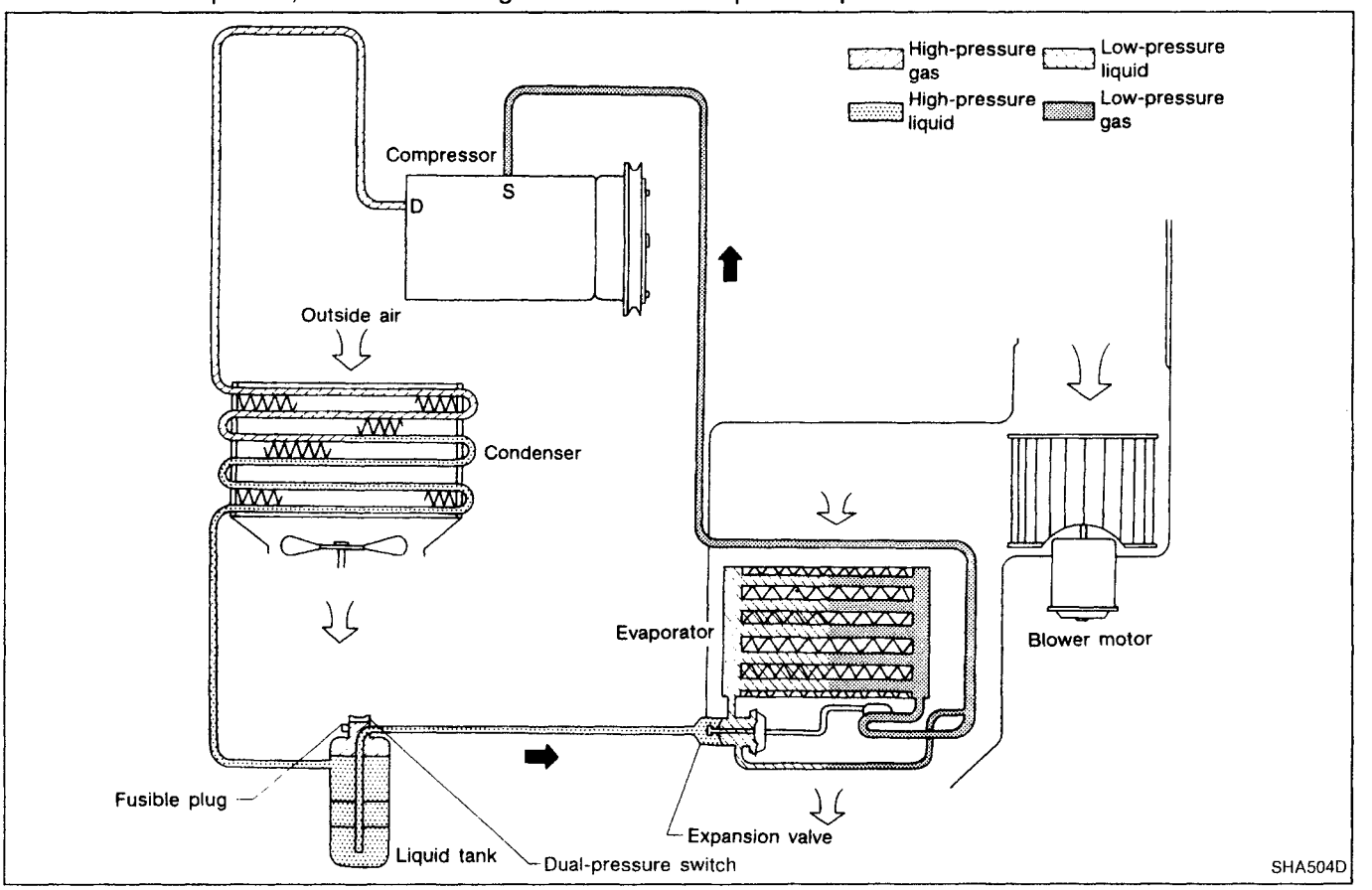

Component Layout

SEC. 270•271•272•273

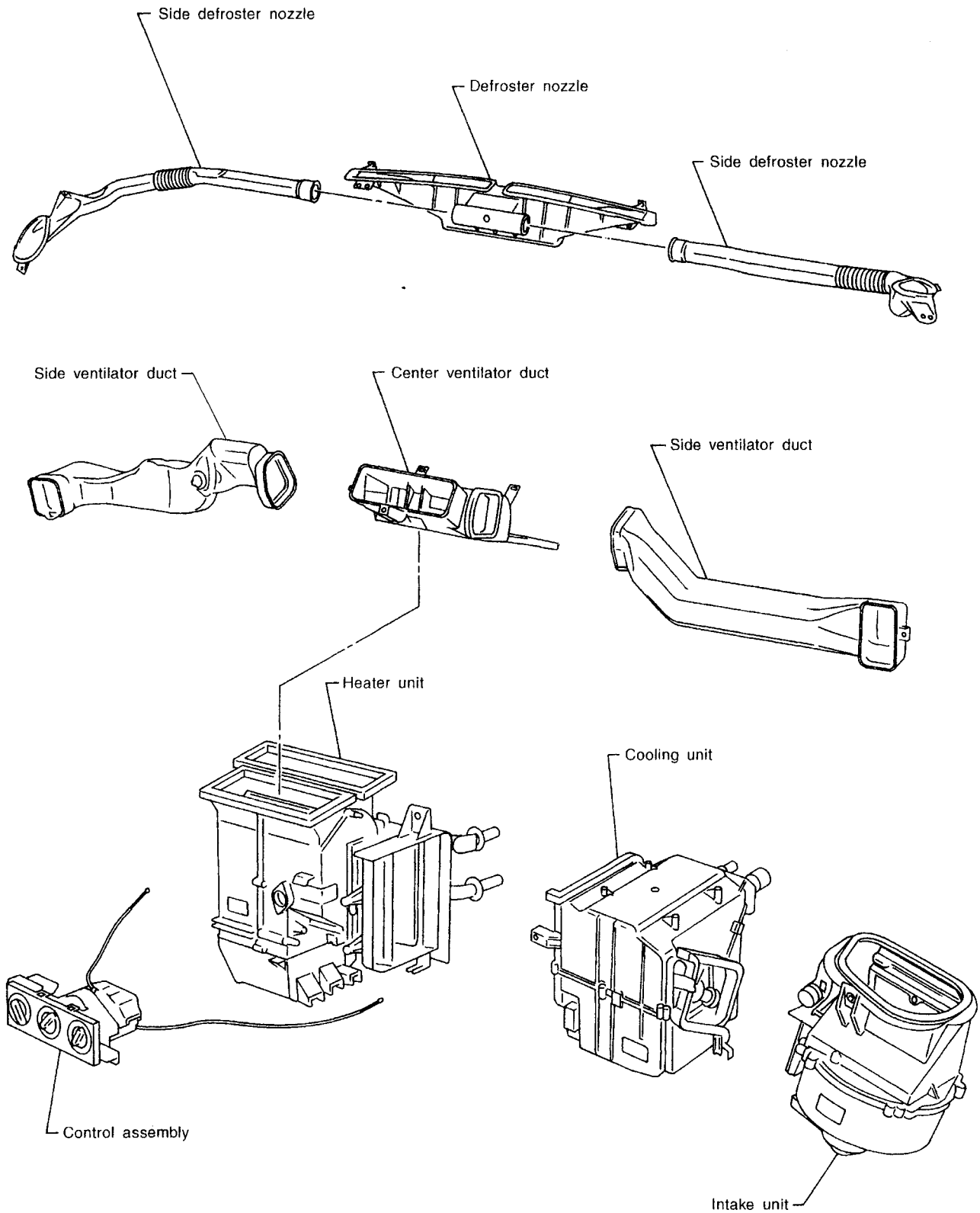

This illustration is for LHD models.
The layout for RHD models is symmetrically opposite to this layout.

RHA312F

Discharge Air Flow

①: Ventilation ③: Defroster
②: Foot

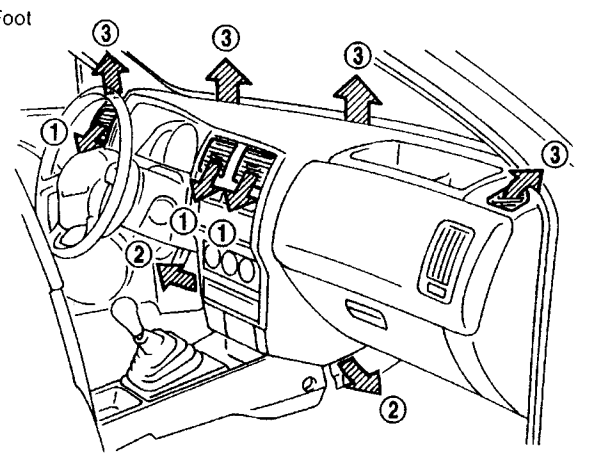

Ventilation
(switch "ON")

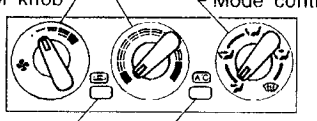

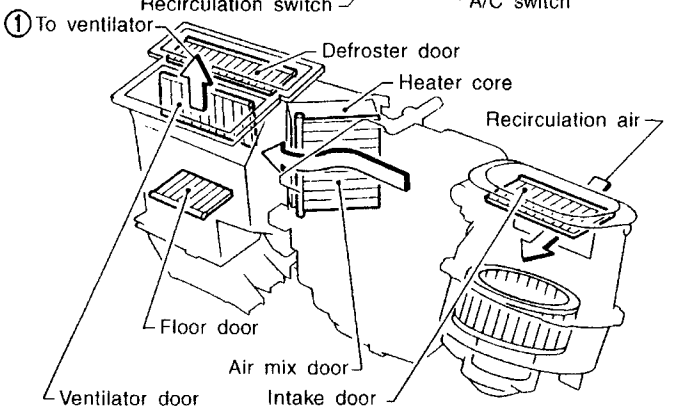

Bi-level
(switch "OFF")

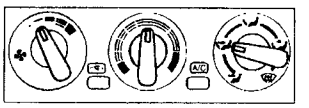

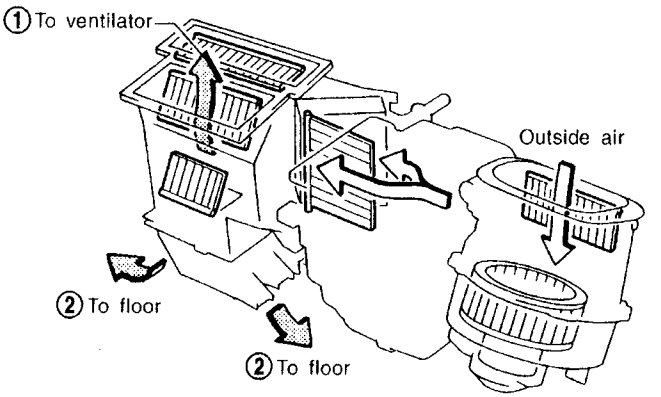

This illustration is for LHD models.
The layout for RHD models is symmetrically opposite.

Floor

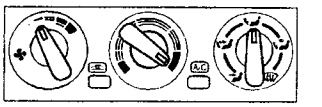

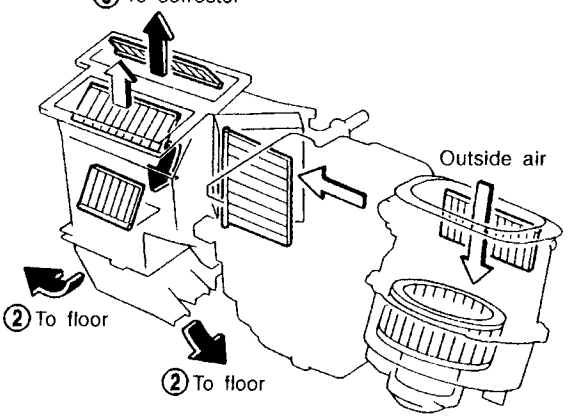

Defroster

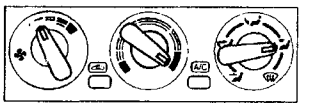

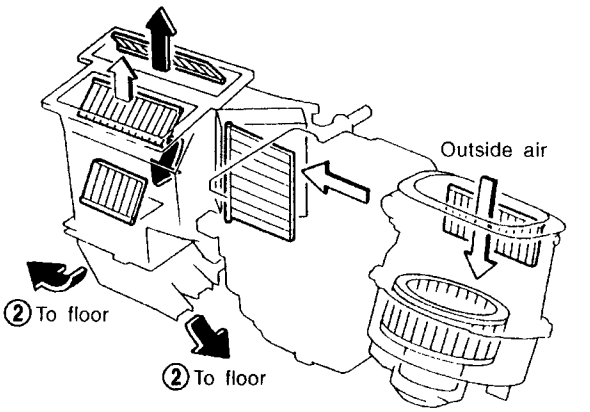

Floor and defroster

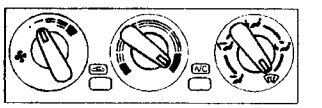

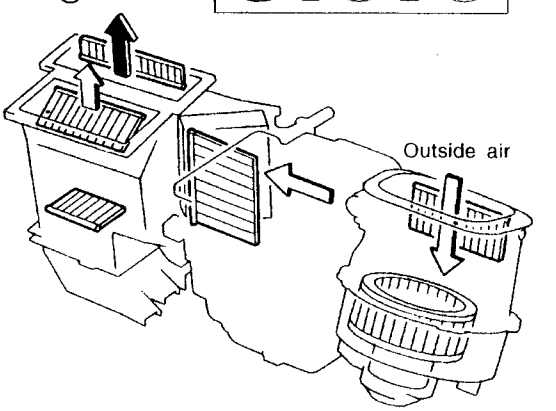

: Air passed through heater core
: Mixed air (+)
: Air not passed through heater core

RHA313F

Control Operation

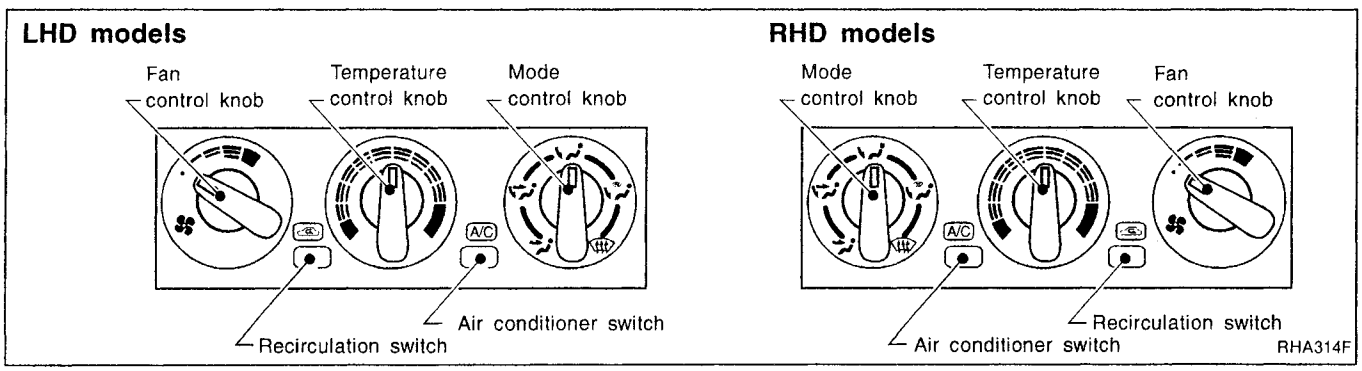

FAN CONTROL KNOB

This knob turns the fan ON and OFF, and controls fan speed.

MODE CONTROL KNOB

This knob controls the outlet air flow.

TEMPERATURE CONTROL KNOB

This knob allows adjustment of the temperature of the outlet air.

RECIRCULATION (REC) SWITCH

OFF position:
Outside air is drawn into the passenger compartment.
ON position:
Interior air is recirculated inside the vehicle.
The indicator lamp will also light.

AIR CONDITIONER SWITCH

The air conditioner switch controls the A/C system. When the switch is depressed with the fan ON, the compressor will turn ON. The indicator lamp will also light.

The air conditioner cooling function operates only when the engine is running.

Contents

How to Perform Trouble Diagnoses for Quick and Accurate Repair HA-15
Operational Check HA-16
Symptom Chart HA-18
Preliminary Check HA-20
PRELIMINARY CHECK 1
(A/C does not blow cold air.) HA-20
PRELIMINARY CHECK 2
(Air outlet does not change.) HA-21
PRELIMINARY CHECK 3
(Noise) HA-22
PRELIMINARY CHECK 4
(Insufficient heating) HA-23
Performance Test Diagnoses HA-24
INSUFFICIENT COOLING HA-24
Performance Chart HA-26
TEST CONDITION HA-26
TEST READING HA-26
Trouble Diagnoses for Abnormal Pressure HA-27
Harness Layout HA-31
Circuit Diagram — Air Conditioner HA-34
Wiring Diagram — HEATER — HA-36
Wiring Diagram — A/C — HA-38
Main Power Supply and Ground Circuit Check HA-49
Diagnostic Procedure 1
(SYMPTOM: Blower motor does not rotate.) HA-50
Diagnostic Procedure 2
(SYMPTOM: Intake door does not change.) HA-52
Diagnostic Procedure 3
(SYMPTOM: Magnet clutch does not operate when A/C switch and fan switch are ON.)
— For GA and SR engines HA-54
— For CD engine HA-59
Electrical Components Inspection HA-62
Control Linkage Adjustment HA-64
System Description HA-65

How to Perform Trouble Diagnoses for Quick and Accurate Repair

WORK FLOW

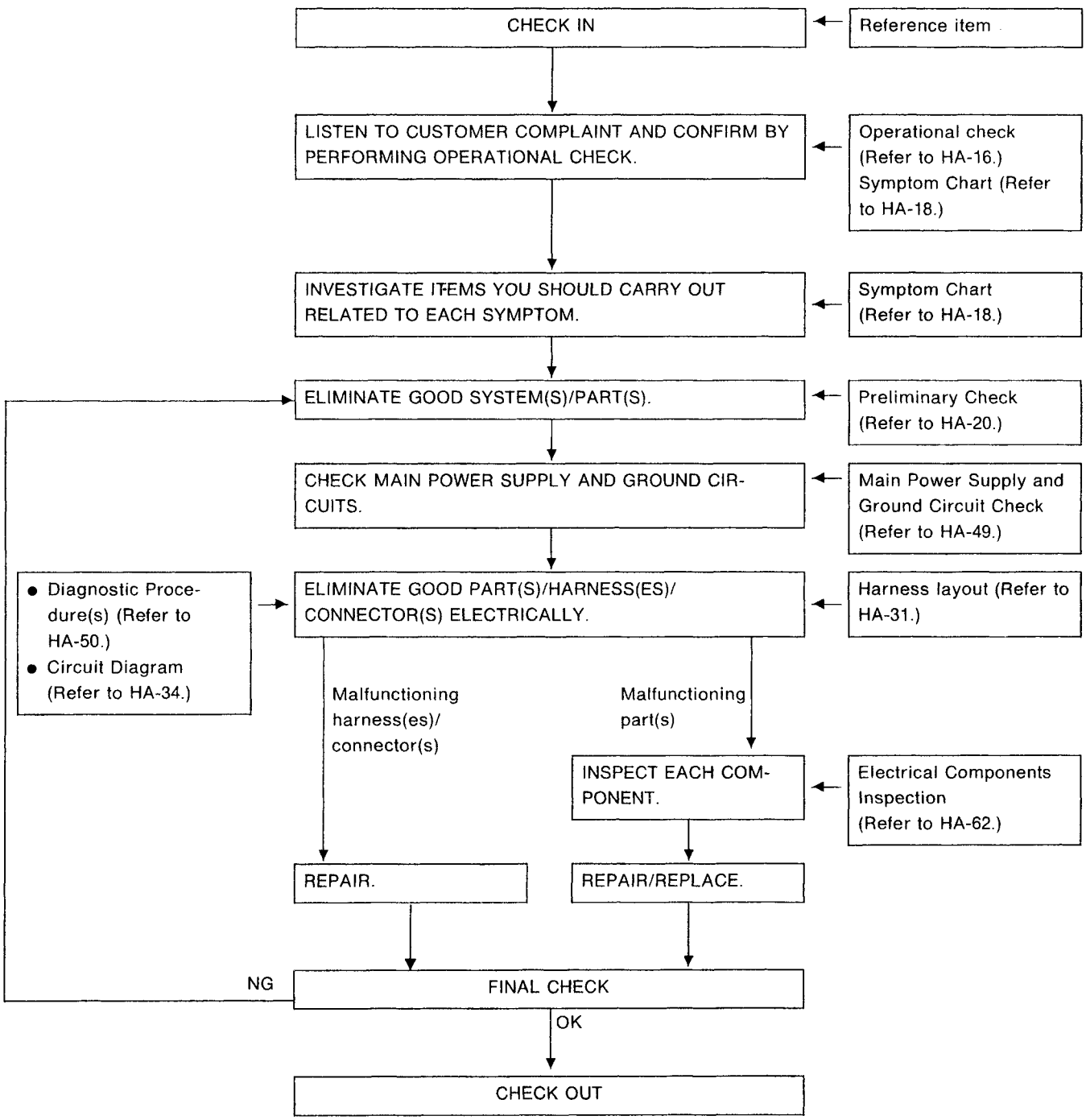

HA

Operational Check

The purpose of the operational check is to confirm that the system operates as it should. The systems which are checked are the blower, mode (discharge air), intake air, temperature decrease, temperature increase.

CONDITIONS:

Engine running at normal operating temperature.

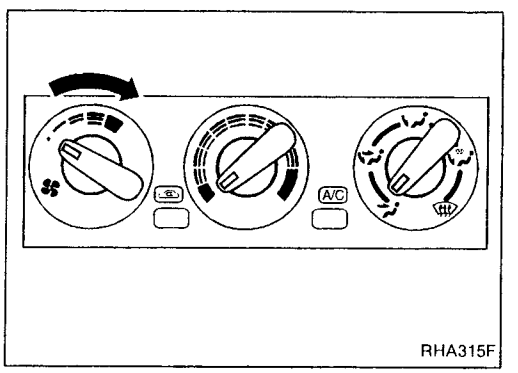

RHA315F

PROCEDURE:

1. Check blower

1) Turn fan control knob to 1-speed.
   Blower should operate on 1-speed.
2) Then turn fan control knob to 2-speed.
3) Continue checking blower speed until all four speeds are checked.
4) Leave blower on 4-speed.

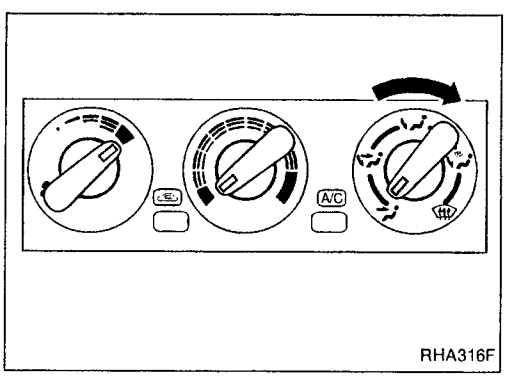

RHA316F

2. Check discharge air.

1) Turn mode control knob.

Discharge air flow

Switch mode/ indicator	Air outlet/distribution					
	RHD models			LHD models		
	Face	Foot	Defroster	Face	Foot	Defroster
	100%	–	–	100%	–	–
	60%	40%	–	60%	40%	–
	–	80%	20%	14%	65%	21%
	–	60%	40%	13%	57%	30%
	–	–	100%	–	–	100%

RHA317F

2) Confirm that discharge air comes out according to the air distribution table at left.
   Refer to "Discharge Air Flow" in "DESCRIPTION" (HA-12).

Operational Check (Cont'd)

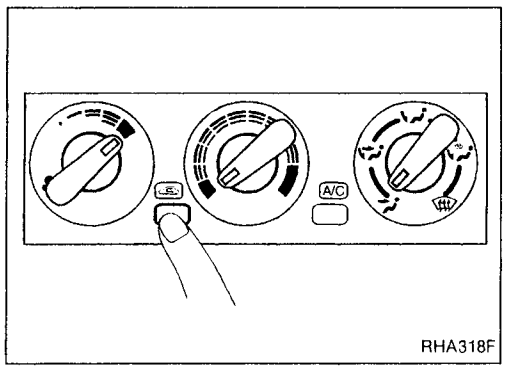

RHA318F

3. Check recirculation

1) Press recirculation switch.
   Recirculation indicator should light.
2) Listen for intake door position change (you should hear blower sound change slightly).

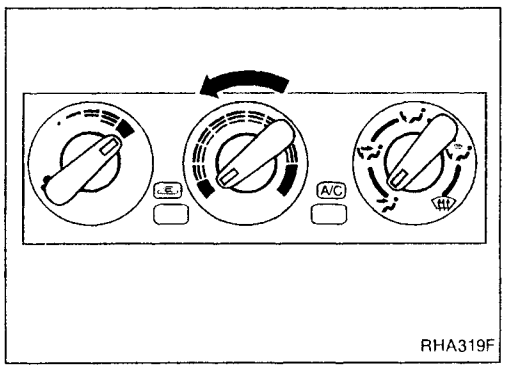

RHA319F

4. Check temperature decrease

1) Turn temperature control knob to full cold.
2) Check for cold air at discharge air outlets.

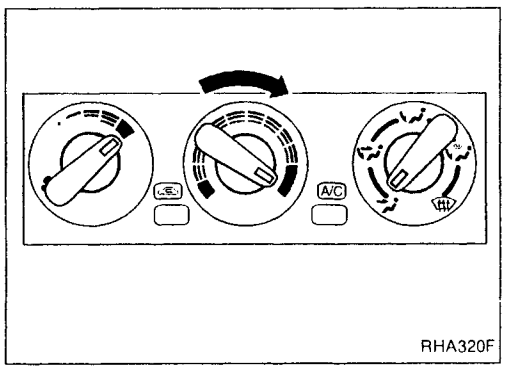

RHA320F

5. Check temperature increase

1) Turn temperature control knob to full hot.
2) Check for hot air at discharge air outlets.

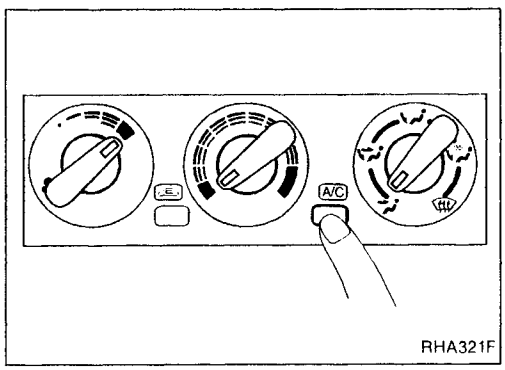

RHA321F

6. Check air conditioner switch

Turn fan control knob to the desired (1 to 4-speed) position and push the air conditioner switch to turn ON the air conditioner.
The indicator light should come on when air conditioner is ON.

HA

Symptom Chart

DIAGNOSTIC TABLE

PROCEDURE	Preliminary Check				Diagnostic Procedure			Main Power Supply and Ground Circuit Check		
REFERENCE PAGE	HA-20	HA-21	HA-22	HA-23	HA-50	HA-52	HA-54	HA-49	HA-49	HA-49
SYMPTOM	Preliminary check 1	Preliminary check 2	Preliminary check 3	Preliminary check 4	Diagnostic procedure 1	Diagnostic procedure 2	Diagnostic procedure 3	15A Fuses	7.5A fuses	Thermo control amp.
A/C does not blow cold air.	❶				○		○	○	○	○
Blower motor does not rotate.	❶				❷			○		
Insufficient heating				❶	○					
Air outlet does not change.		❶								
Intake door does not change.						❶			○	○
Magnet clutch does not operate when A/C switch and fan switch are ON.	❶						❷	○	○	○
Noise			❶							

❶, ❷: The number means checking order.
○ : As for checking order, refer to each flow chart. (It depends on malfunctioning portion.)

Symptom Chart (Cont'd)

Electrical Components Inspection

Blower motor	Blower resistor	A/C switch	Recirculation switch	Fan switch	A/C relay	Thermo control amp.	Dual-pressure switch	Thermal protector	Compressor	ECM (ECCS control module), ECM (Engine control module)	Illumination system	Harness	
○	○	○		○	○	○	○	○		○		○	HA-62
○	○			○								○	HA-63
												○	HA-63
												○	HA-63
			○									○	HA-63
		○		○	○	○	○	○		○		○	HA-62
													HA-64
													HA-63
													HA-64
													HA-63
													Refer to EC section
													Refer to EL section
													—

HA

Preliminary Check

PRELIMINARY CHECK 1

A/C does not blow cold air.

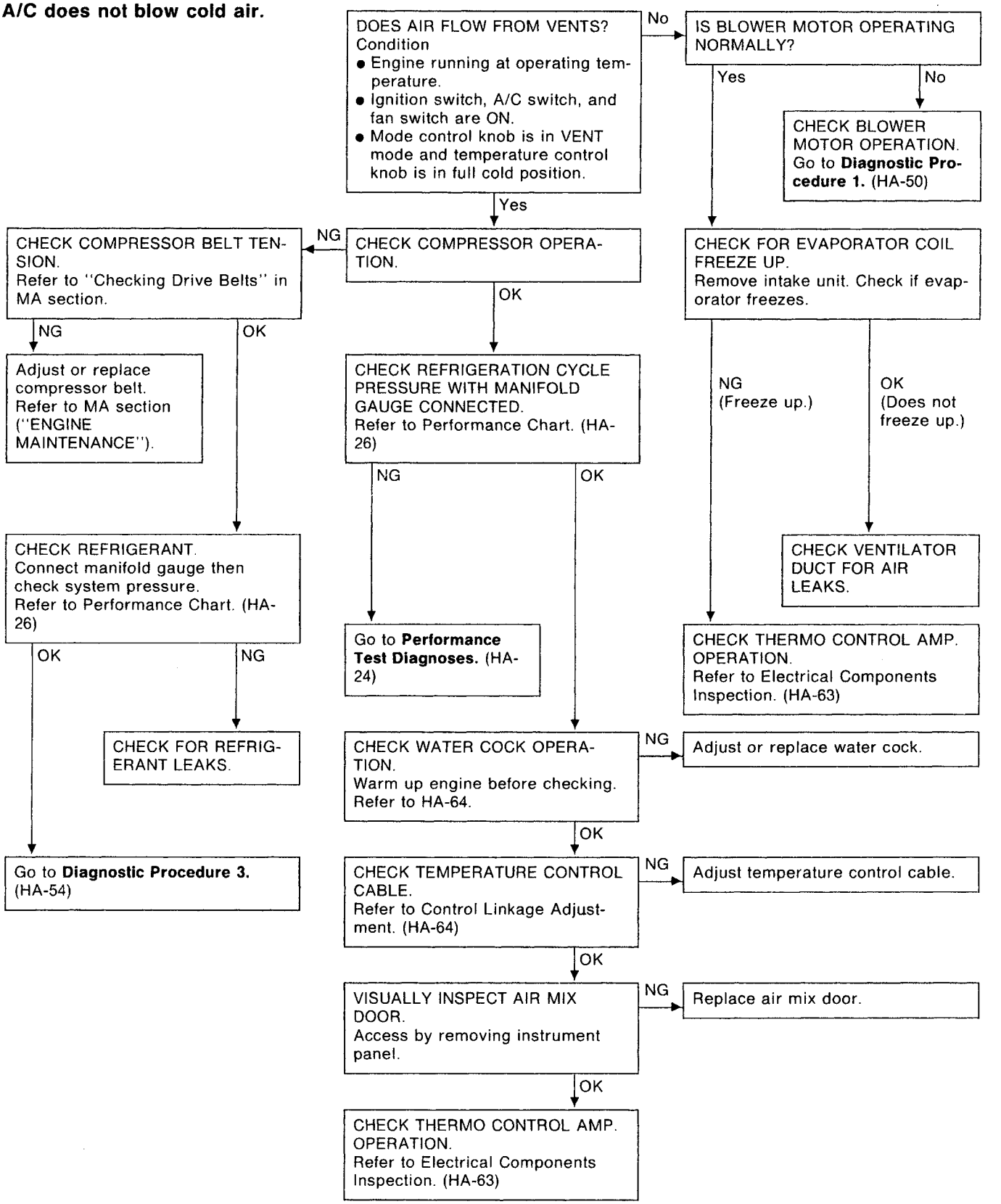

PRELIMINARY CHECK 2

Air outlet does not change.

TURN IGNITION SWITCH AND FAN SWITCH ON. DOES AIR COME OUT NORMALLY FROM EACH DUCT WHEN EACH MODE SWITCH IS PUSHED?

Discharge air flow

Switch mode/ indicator	Air outlet/distribution					
	RHD models			LHD models		
	Face	Foot	Defroster	Face	Foot	Defroster
	100%	–	–	100%	–	–
	60%	40%	–	60%	40%	–
	–	80%	20%	14%	65%	21%
	–	60%	40%	13%	57%	30%
	–	–	100%	–	–	100%

No → Adjust mode control cable. Refer to HA-64.

Yes ↓

INSPECTION END

HA

PRELIMINARY CHECK 3

Noise

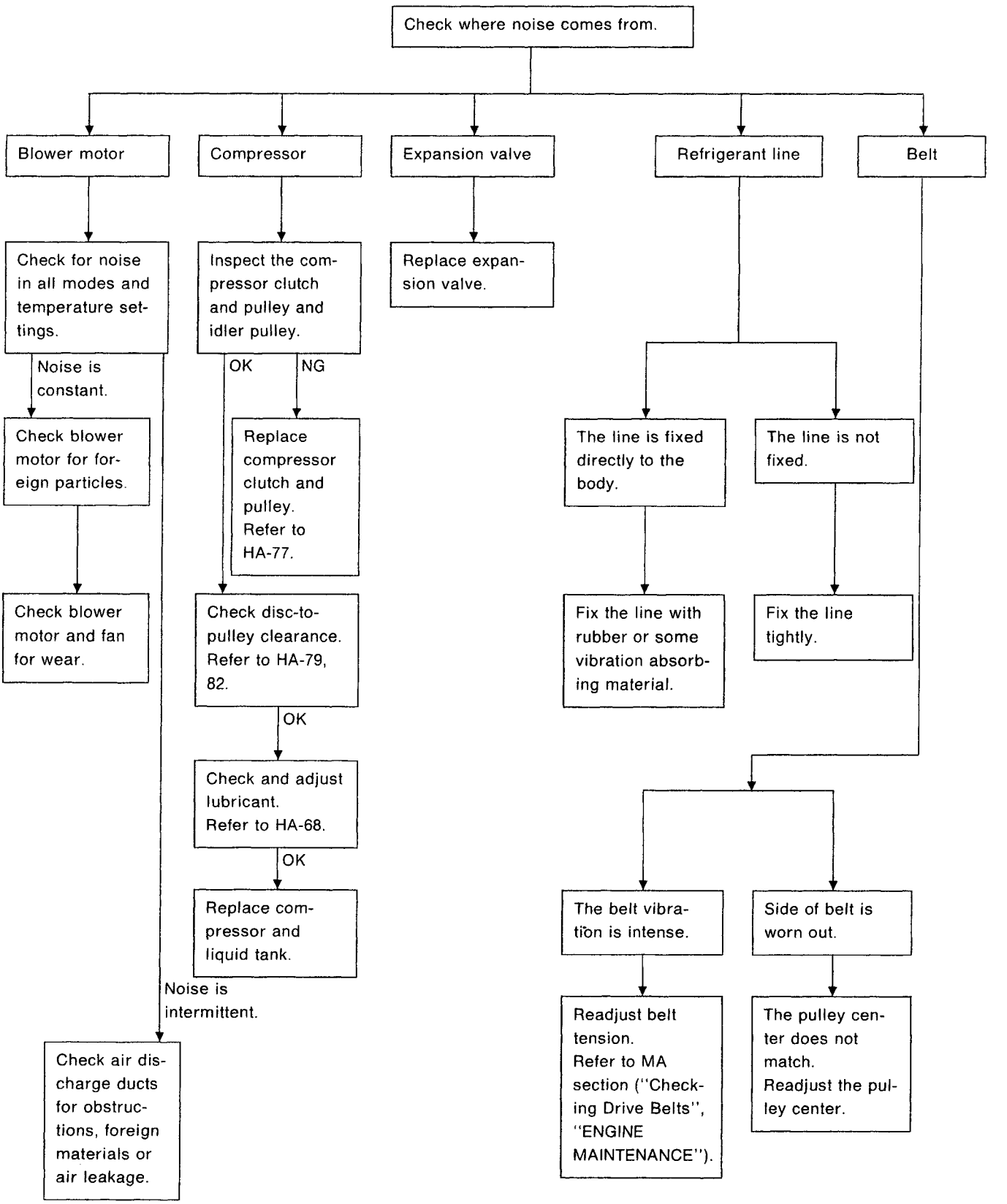

PRELIMINARY CHECK 4

Insufficient heating

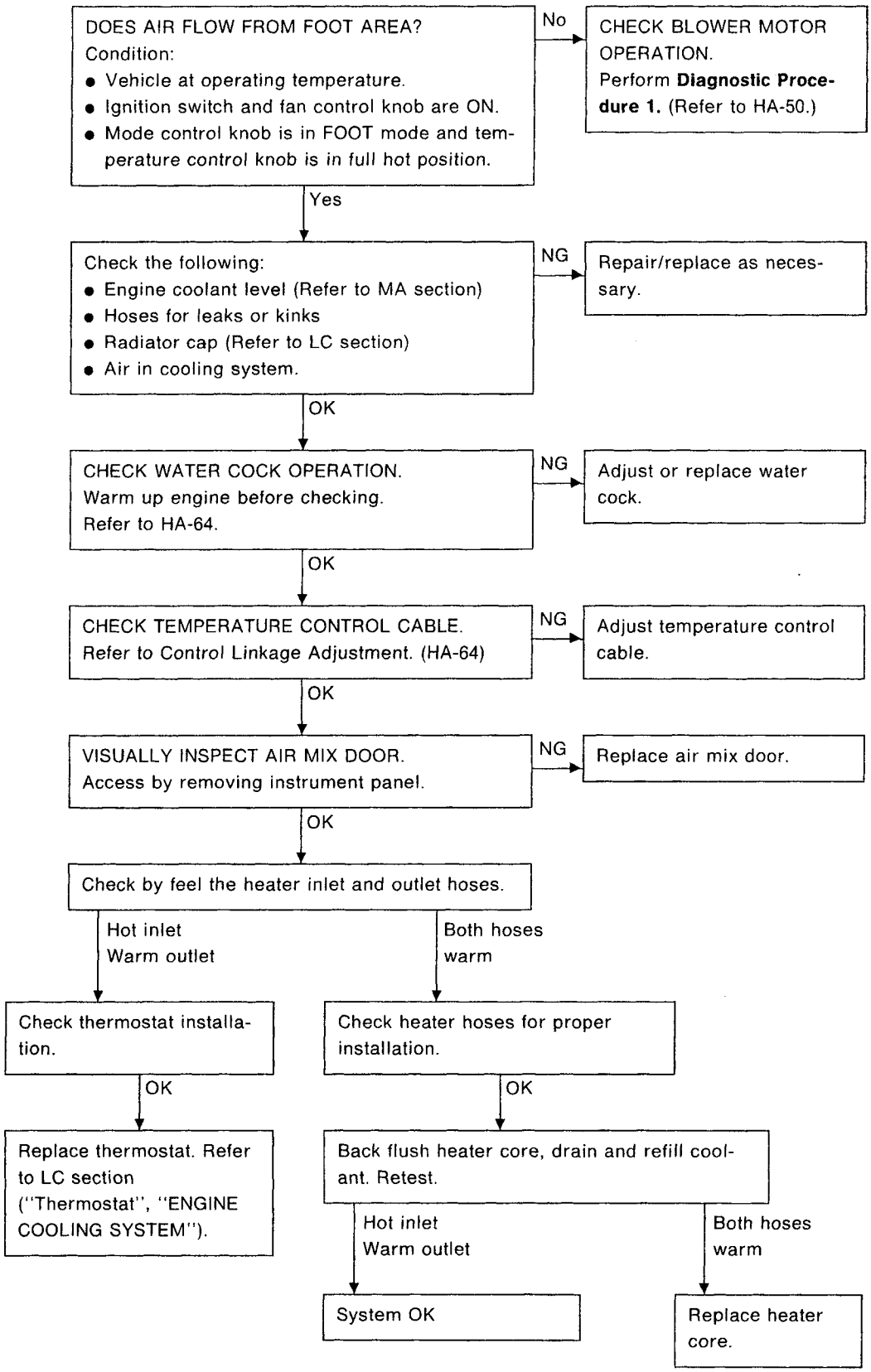

HA

Performance Test Diagnoses

INSUFFICIENT COOLING

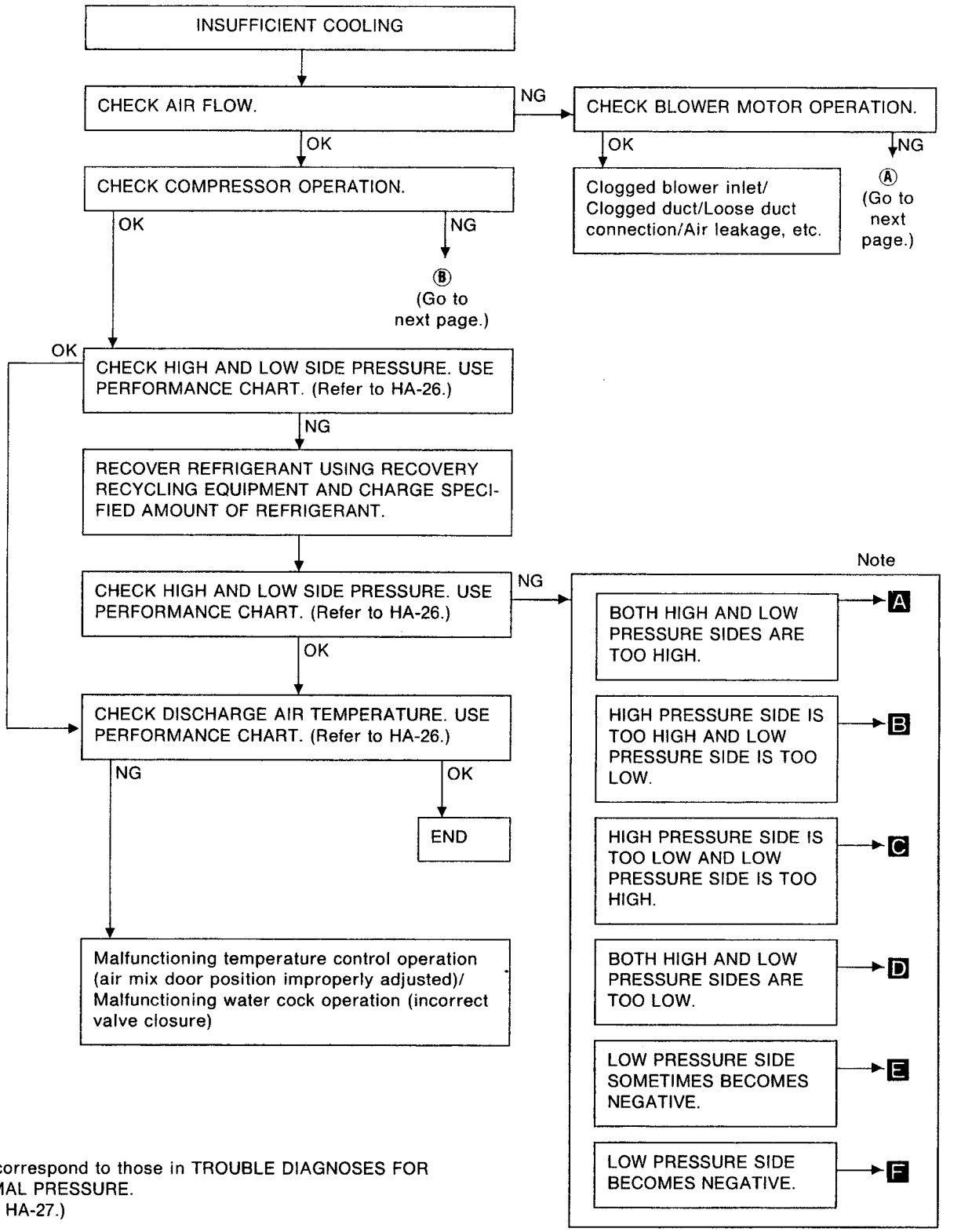

Note: A-F correspond to those in TROUBLE DIAGNOSES FOR ABNORMAL PRESSURE.
(Refer to HA-27.)

Performance Test Diagnoses (Cont'd)

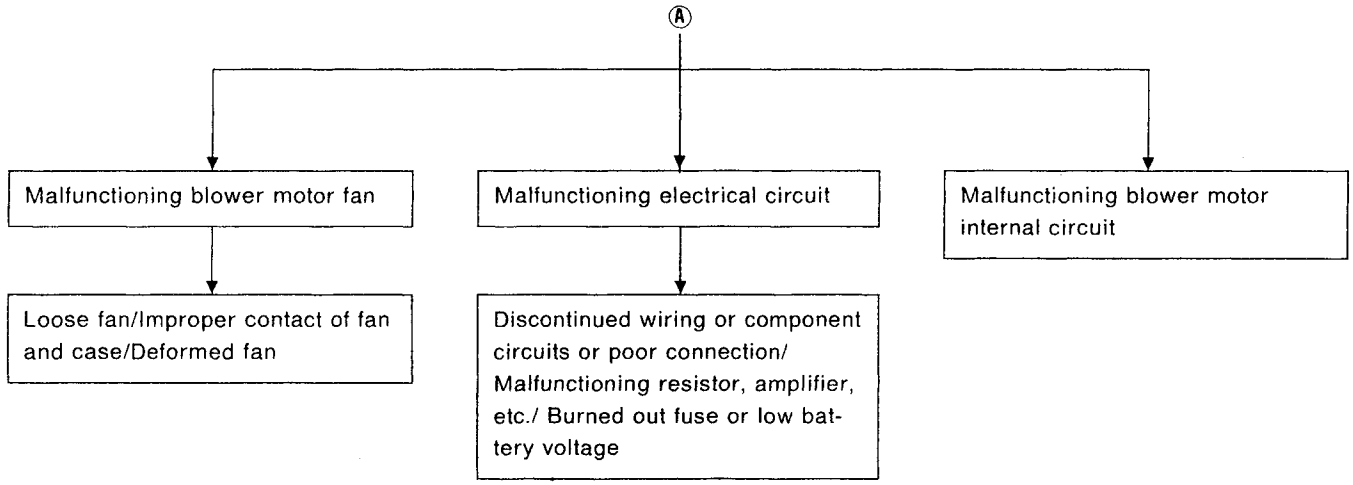

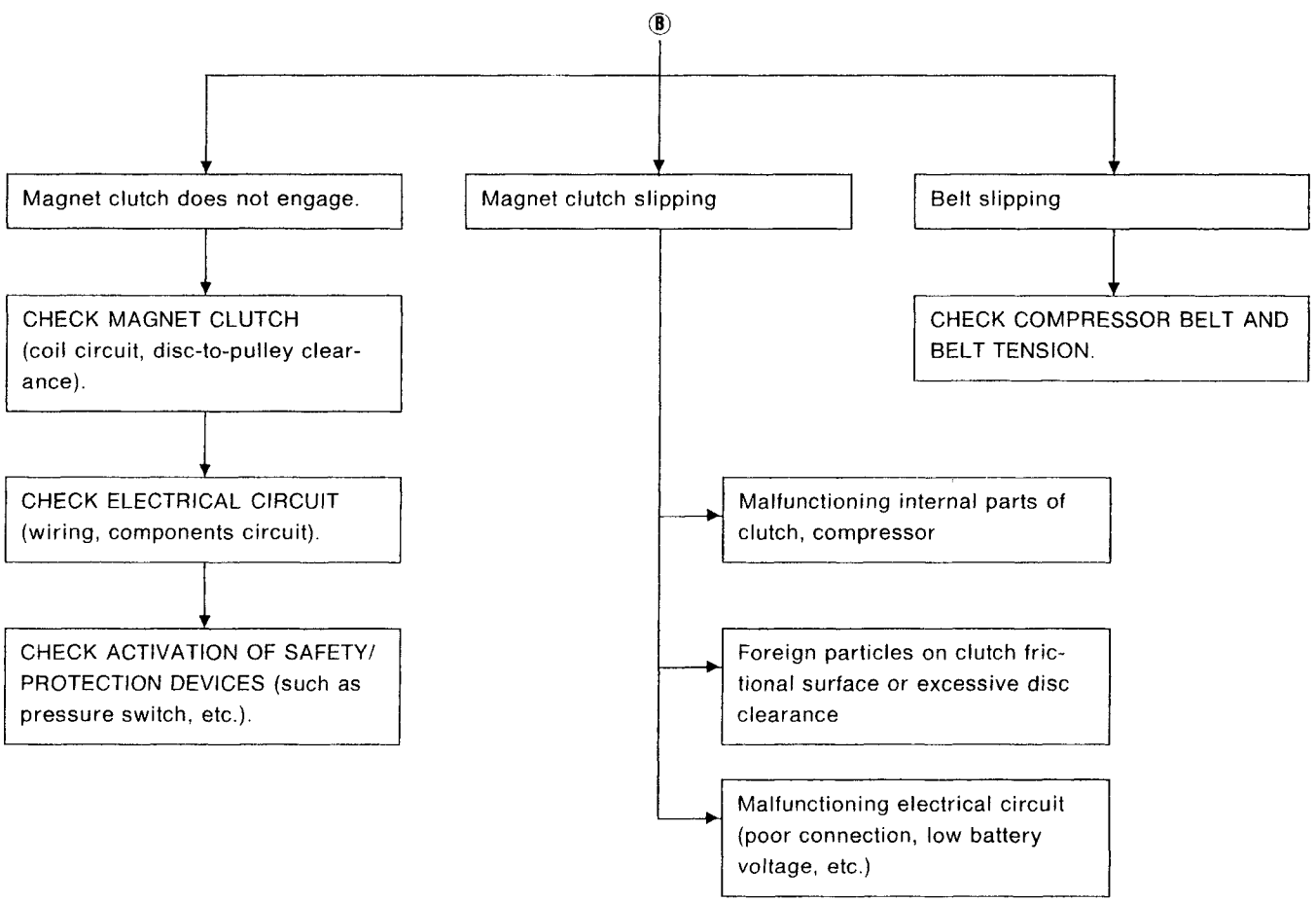

HA

Performance Chart

TEST CONDITION

Testing must be performed as follows:

Vehicle location: Indoors or in the shade (in a well-ventilated place)
Doors: Closed
Door window: Open
Hood: Open
TEMP.: Max. COLD
Discharge Air: Face Vent
REC switch: (Recirculation) set
FAN speed: High speed
Engine speed: Idle speed
Operate the air conditioning system for 10 minutes before taking measurements.

TEST READING

Recirculating-to-discharge air temperature table

Inside air (Recirculating air) at blower assembly inlet		Discharge air temperature at center ventilator °C (°F)
Relative humidity %	Air temperature °C (°F)	
50 - 60	25 (77)	11.4 - 13.6 (53 - 56)
	30 (86)	15.7 - 18.3 (60 - 65)
	35 (95)	20.5 - 23.8 (69 - 75)
	40 (104)	26.0 - 30.8 (79 - 87)
60 - 70	25 (77)	13.6 - 16.0 (56 - 61)
	30 (86)	18.3 - 21.1 (65 - 70)
	35 (95)	23.8 - 27.4 (75 - 81)
	40 (104)	30.8 - 36.0 (87 - 97)

Ambient air temperature-to-operating pressure table

Ambient air		High-pressure (Discharge side) kPa (bar, kg/cm^2, psi)	Low-pressure (Suction side) kPa (bar, kg/cm^2, psi)
Relative humidity %	Air temperature °C (°F)		
50 - 70	25 (77)	892 - 1,138 (8.92 - 11.38, 9.1 - 11.6, 129 - 165)	118 - 226 (1.18 - 2.26, 1.2 - 2.3, 17 - 33)
	30 (86)	1,108 - 1,393 (11.08 - 13.93, 11.3 - 14.2, 161 - 202)	137 - 265 (1.37 - 2.65, 1.4 - 2.7, 20 - 38)
	35 (95)	1,344 - 1,677 (13.44 - 16.77, 13.7 - 17.1, 195 - 243)	177 - 314 (1.77 - 3.14, 1.8 - 3.2, 26 - 46)
	40 (104)	1,589 - 1,971 (15.89 - 19.71, 16.2 - 20.1, 230 - 286)	226 - 373 (2.26 - 3.73, 2.3 - 3.8, 33 - 54)

Trouble Diagnoses for Abnormal Pressure

Whenever system's high and/or low side pressure is abnormal, diagnose using a manifold gauge. The marker above the gauge scale in the following tables indicates the standard (normal) pressure range. Since the standard (normal) pressure, however, differs from vehicle to vehicle, refer to HA-26 ("Ambient air temperature-to-operating pressure table").

Gauge indication	Refrigerant cycle	Probable cause	Corrective action
Both high and low-pressure sides are too high. A 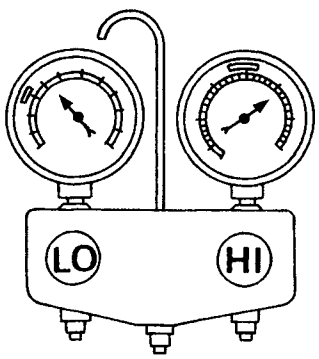 AC359A	• Pressure is reduced soon after water is splashed on condenser.	Excessive refrigerant charge in refrigeration cycle	Reduce refrigerant until specified pressure is obtained.
	Air suction by cooling fan is insufficient.	Insufficient condenser cooling performance ↓ ① Condenser fins are clogged. ② Improper fan rotation of cooling fan	• Clean condenser. • Check and repair cooling fan as necessary.
	• Low-pressure pipe is not cold. • When compressor is stopped high-pressure value quickly drops by approximately 196 kPa (2.0 bar, 2 kg/cm^2, 28 psi). It then decreases gradually thereafter.	Poor heat exchange in condenser (After compressor operation stops, high pressure decreases too slowly.) ↓ Air in refrigeration cycle	Evacuate repeatedly and recharge system.
	Engine tends to overheat.	Engine cooling systems malfunction.	Check and repair each engine cooling system.
	• An area of the low-pressure pipe is colder than areas near the evaporator outlet. • Plates are sometimes covered with frost.	• Excessive liquid refrigerant on low-pressure side • Excessive refrigerant discharge flow • Expansion valve is open a little compared with the specification. ↓ ① Improper thermal valve installation ② Improper expansion valve adjustment	Replace expansion valve.

HA

Trouble Diagnoses for Abnormal Pressure (Cont'd)

Gauge indication	Refrigerant cycle	Probable cause	Corrective action
High-pressure side is too high and low-pressure side is too low. **B** 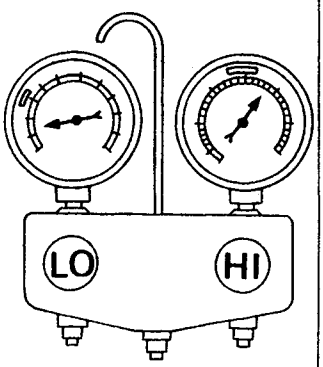 AC360A	Upper side of condenser and high-pressure side are hot, however, liquid tank is not so hot.	High-pressure tube or parts located between compressor and condenser are clogged or crushed.	• Check and repair or replace malfunctioning parts. • Check lubricant for contamination.
High-pressure side is too low and low-pressure side is too high. **C** 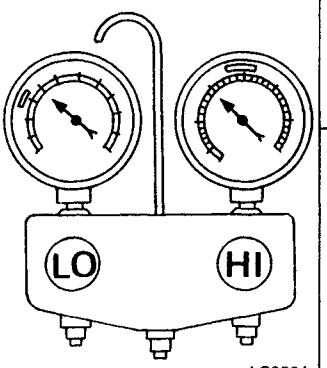 AC356A	High and low-pressure sides become equal soon after compressor operation stops.	Compressor pressure operation is improper. ↓ Damaged inside compressor packings	Replace compressor.
	No temperature difference between high and low-pressure sides	Compressor pressure operation is improper. ↓ Damaged inside compressor packings	Replace compressor.
Both high- and low-pressure sides are too low. **D** 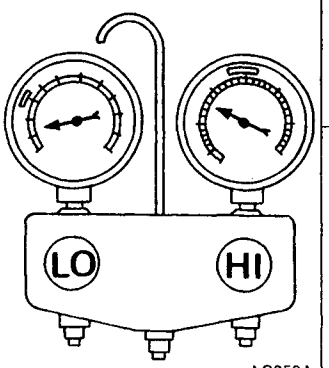 AC353A	• There is a big temperature difference between liquid tank outlet and inlet. Outlet temperature is extremely low. • Liquid tank inlet and expansion valve are frosted.	Liquid tank inside is clogged a little.	• Replace liquid tank. • Check lubricant for contamination.
	• Temperature of expansion valve inlet is extremely low as compared with areas near liquid tank. • Expansion valve inlet may be frosted. • Temperature difference occurs somewhere in high-pressure side	High-pressure pipe located between liquid tank and expansion valve is clogged.	• Check and repair malfunctioning parts. • Check lubricant for contamination.

Trouble Diagnoses for Abnormal Pressure (Cont'd)

Gauge indication	Refrigerant cycle	Probable cause	Corrective action
Both high- and low-pressure sides are too low. **D** 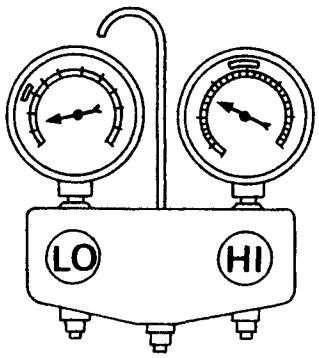 AC353A	There is a big temperature difference between expansion valve inlet and outlet while the valve itself is frosted.	Expansion valve closes a little compared with the specification. ↓ ① Improper expansion valve adjustment ② Malfunctioning thermal valve ③ Outlet and inlet may be clogged.	• Remove foreign particles by using compressed air. • Check lubricant for contamination.
	An area of the low-pressure pipe is colder than areas near the evaporator outlet.	Low-pressure pipe is clogged or crushed.	• Check and repair malfunctioning parts. • Check lubricant for contamination.
	Air flow volume is not enough or is too low.	Compressor pressure operation is improper. ↓ Damaged inside compressor packings	Replace compressor.
Low-pressure side sometimes becomes negative. **E** 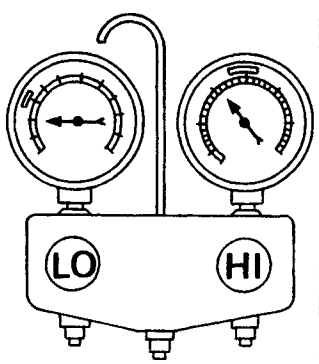 AC354A	• Air conditioning system does not function and does not cyclically cool the compartment air. • The system constantly functions for a certain period of time after compressor is stopped and restarted.	Refrigerant does not discharge cyclically. ↓ Moisture is frozen at expansion valve outlet and inlet. ↓ Water is mixed with refrigerant.	• Drain water from refrigerant or replace refrigerant. • Replace liquid tank.

HA

Trouble Diagnoses for Abnormal Pressure (Cont'd)

Gauge indication	Refrigerant cycle	Probable cause	Corrective action
Low-pressure side becomes negative. F 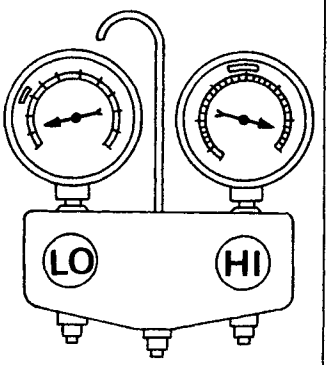 AC362A	Liquid tank or front/rear side of expansion valve's pipe is frosted or dewed.	High-pressure side is closed and refrigerant does not flow. ↓ Expansion valve or liquid tank is frosted.	Leave the system at rest until no frost is present. Start it again to check whether or not the problem is caused by water or foreign particles. • If water is the cause, initially cooling is okay. Then the water freezes, causing a blockage. Drain water from refrigerant or replace refrigerant. • If due to foreign particles, remove expansion valve and remove the particles with dry and compressed air (not shop air). • If either of the above methods cannot correct the problem, replace expansion valve. • Replace liquid tank. • Check lubricant for contamination.

Harness Layout

ENGINE COMPARTMENT

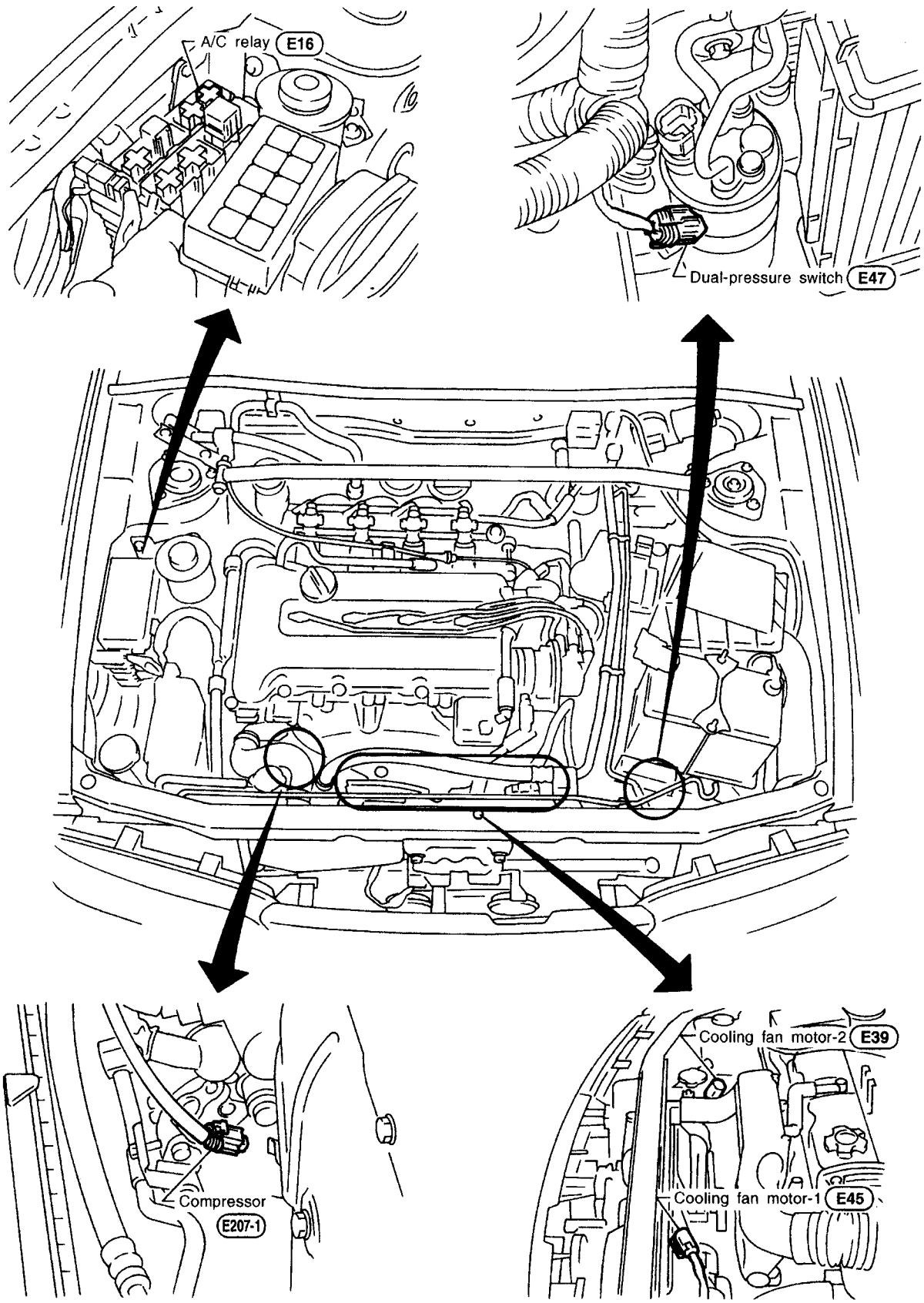

RHA322F

PASSENGER COMPARTMENT

RHD models

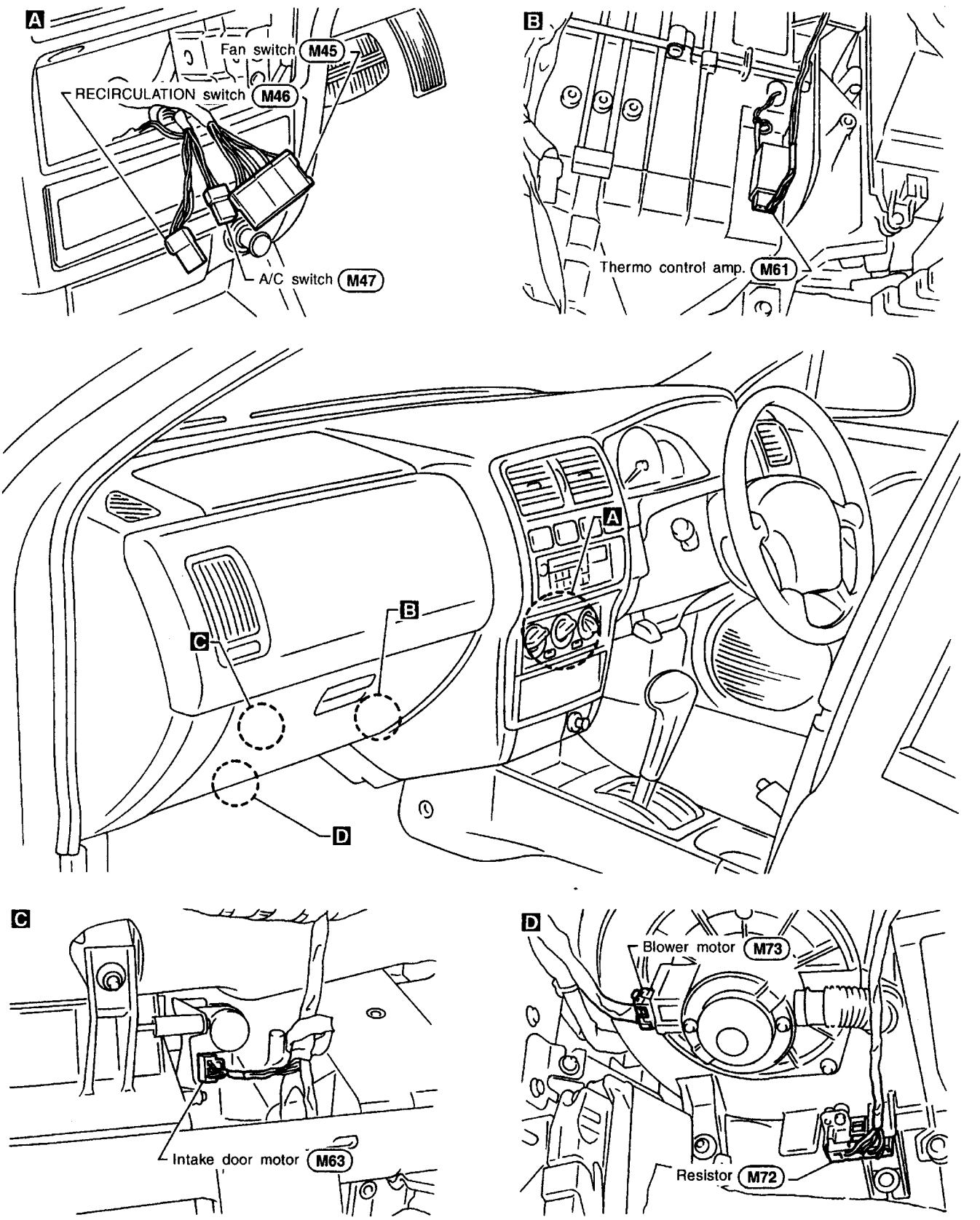

RHA447F

Harness Layout (Cont'd)

LHD models

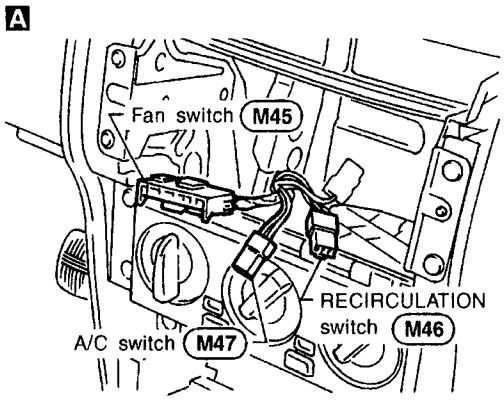

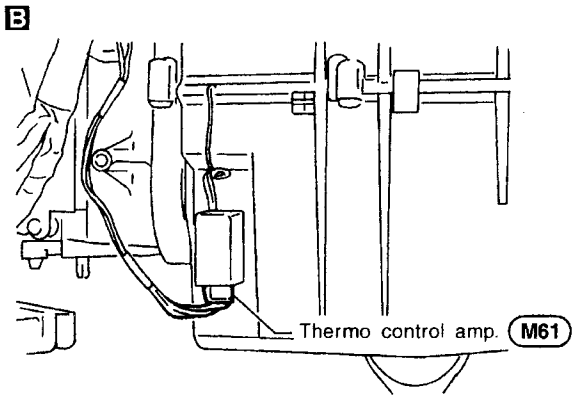

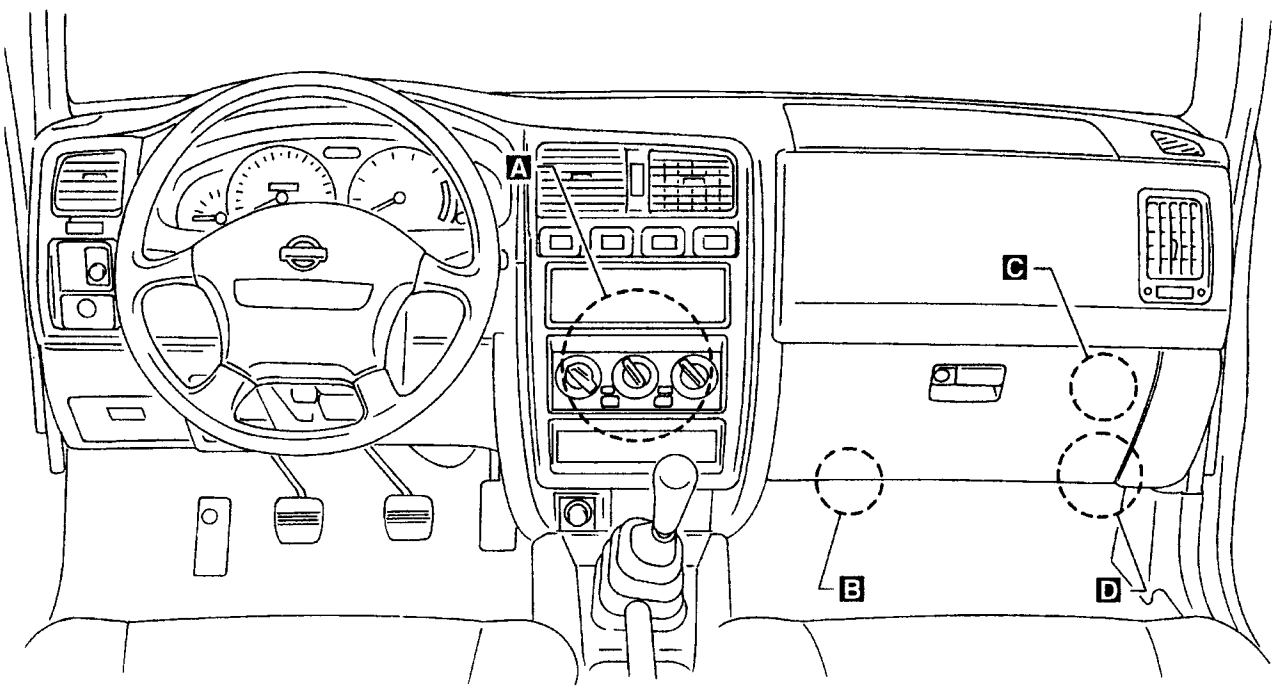

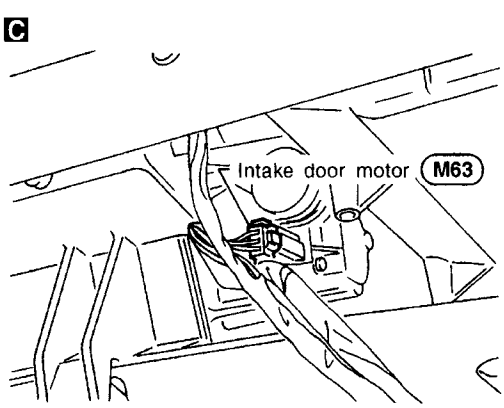

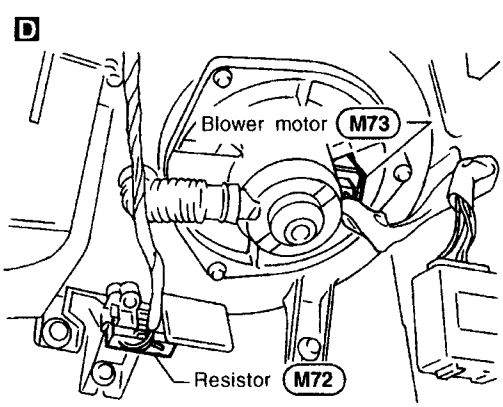

HA

RHA324F

Circuit Diagram — Air Conditioner

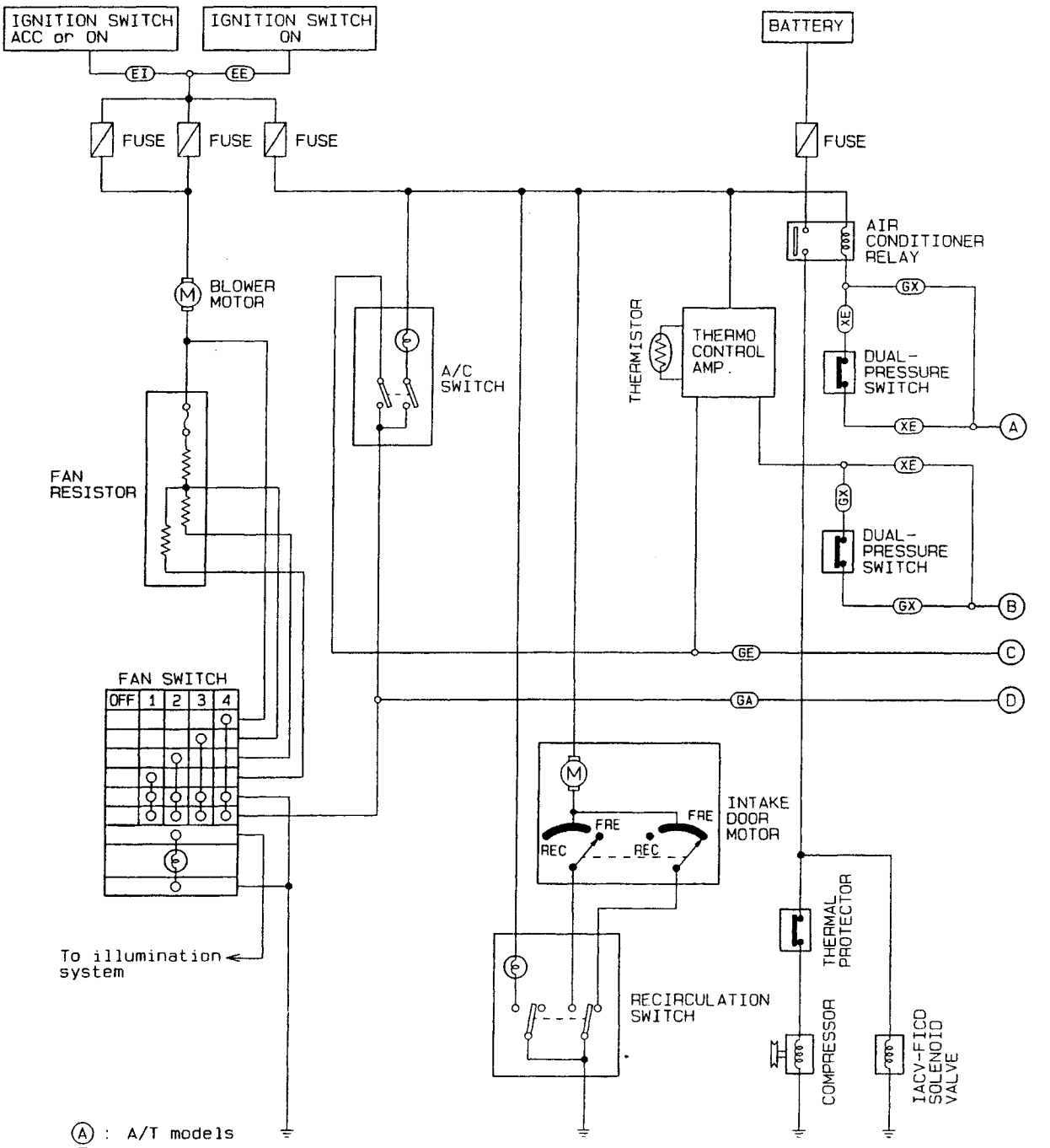

(A) : A/T models
(M) : M/T models
(EI) : For Europe and Israel
(EE) : Except (EI)
(GA) : GA engine models
(GE) : Except for Europe, Israel and Australia
(GX) : GA engine for Europe, Israel and Australia and SR engine
(XE) : Except (GX)
(LA) : LHD A/T models for Europe without daytime light system
(NA) : Except (LA)
*1 : (EI) 41, (EE) 44

HHA001

Circuit Diagram — Air Conditioner (Cont'd)

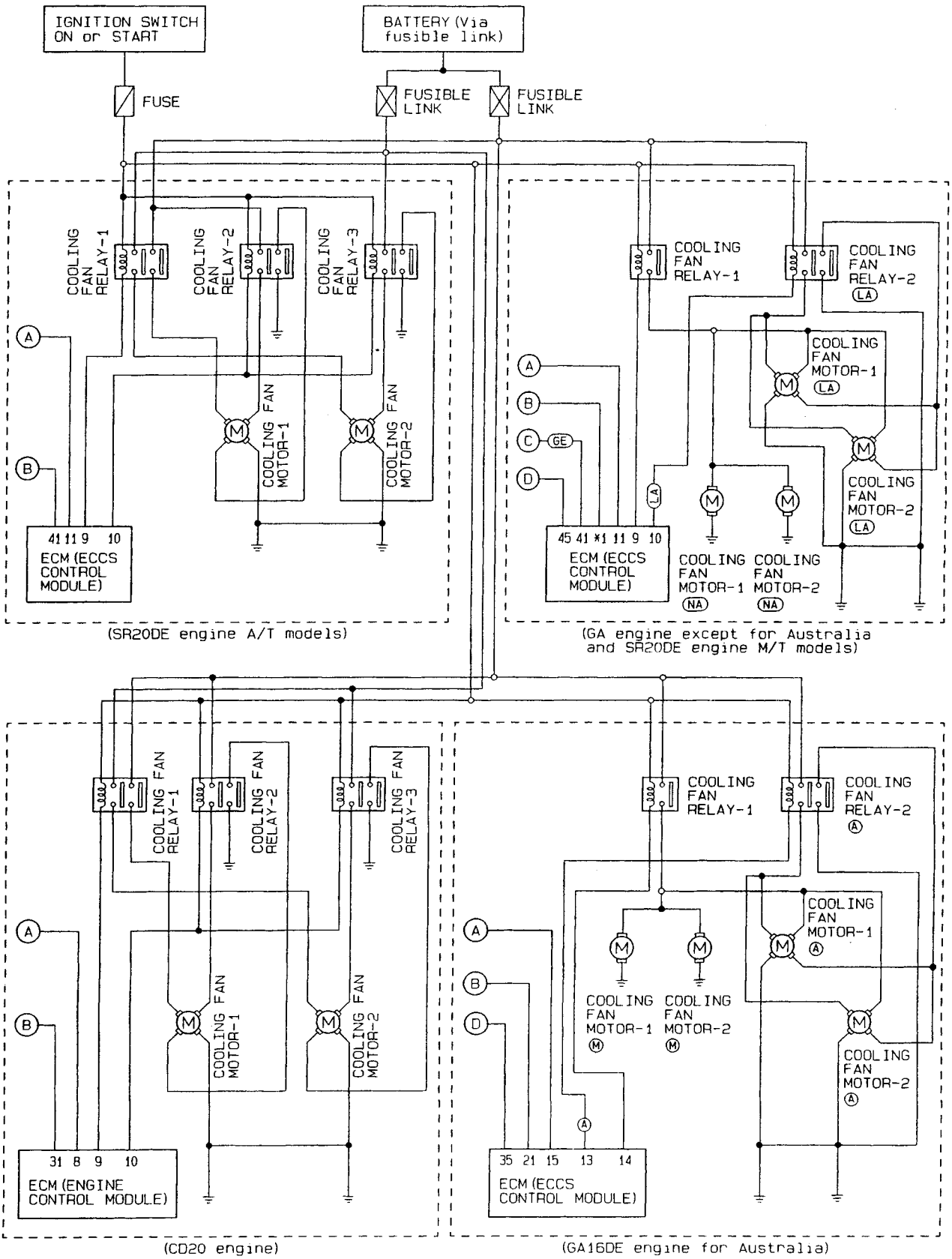

HA

HHA014

Wiring Diagram — HEATER —

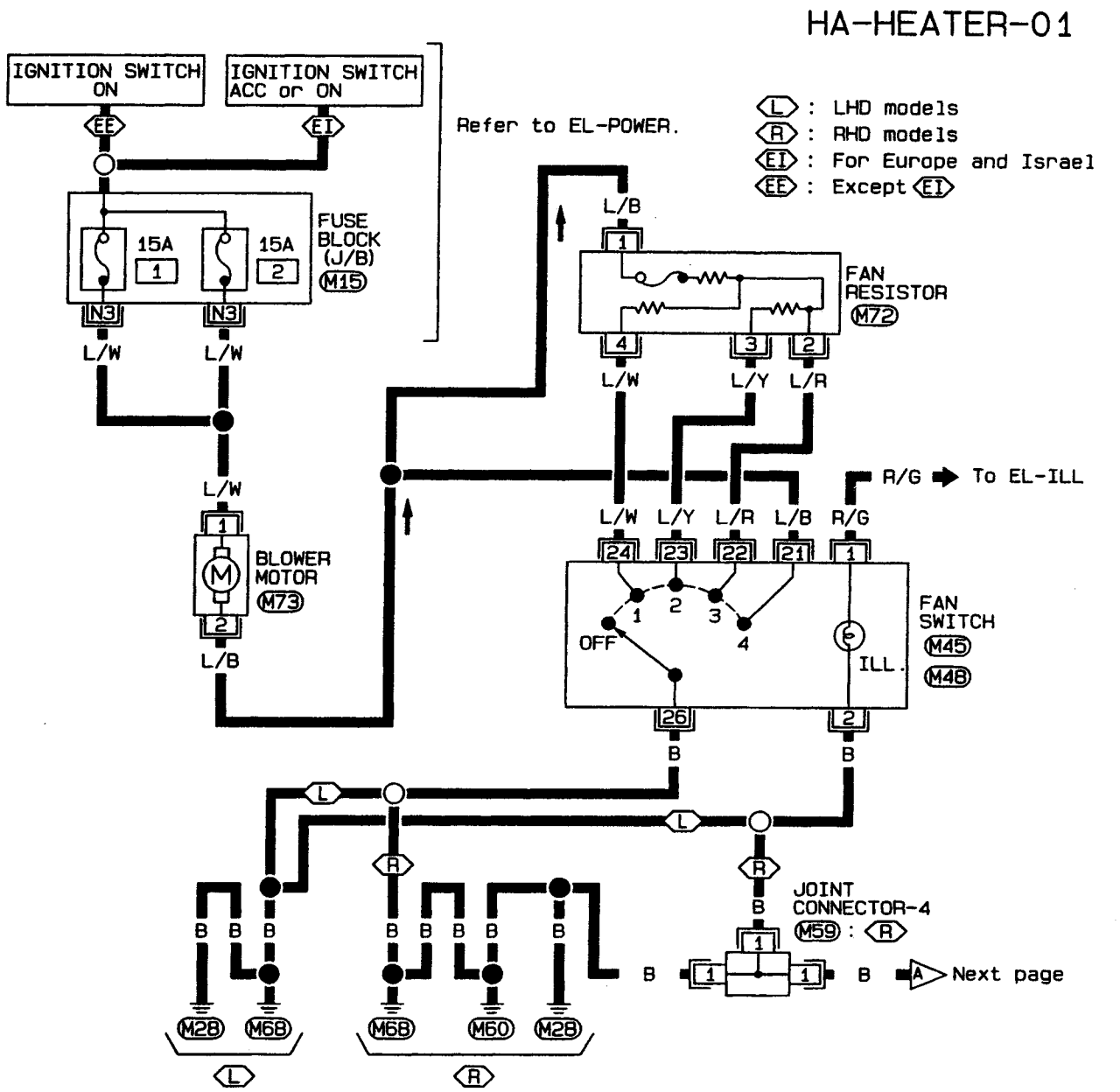

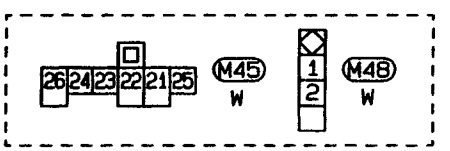

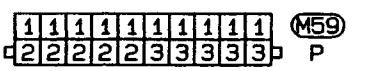

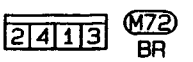

Refer to last page (Foldout page).

M15

HHA012

Wiring Diagram — HEATER — (Cont'd)

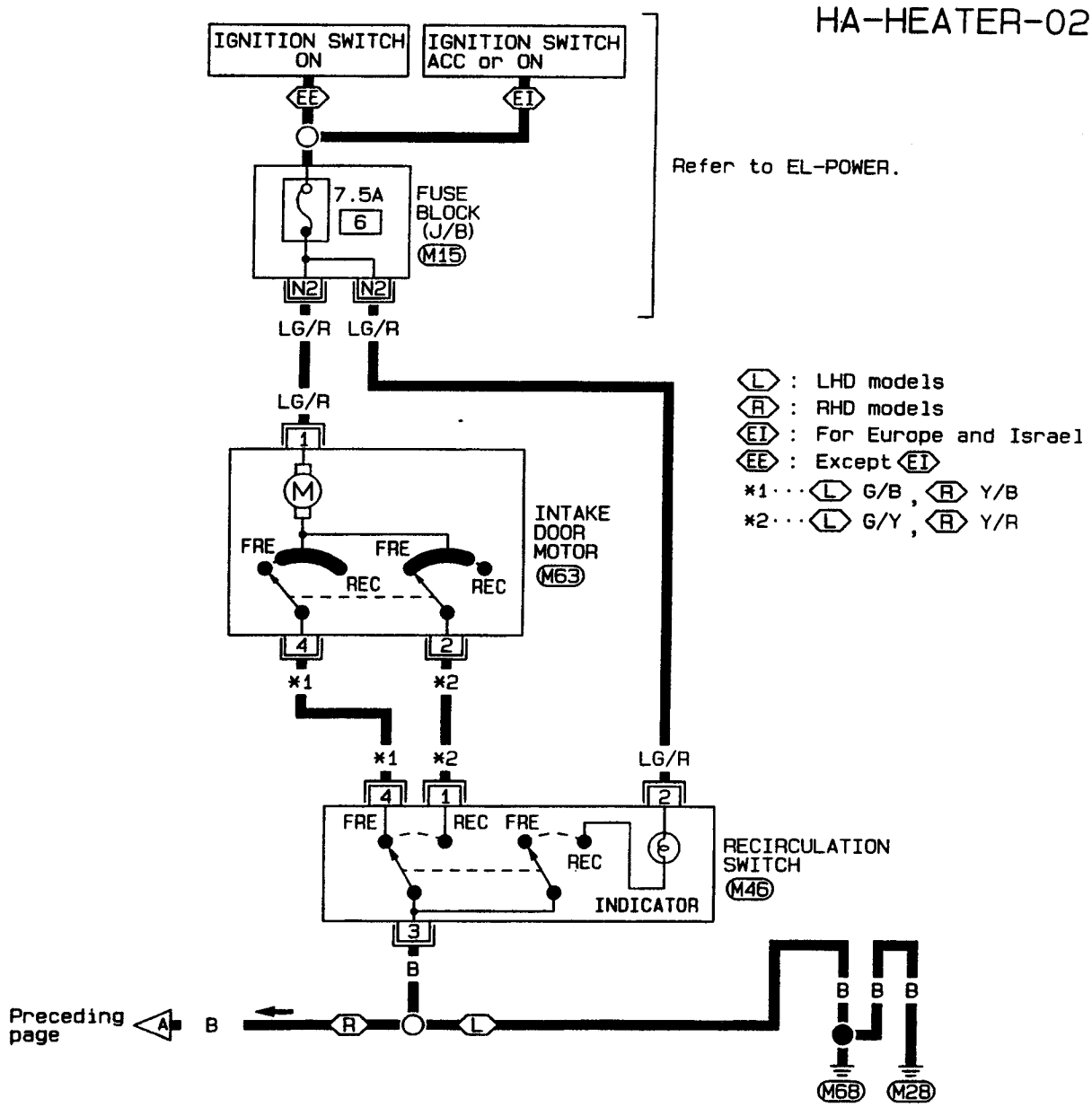

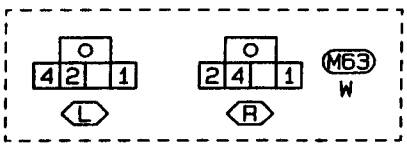

Refer to last page (Foldout page).

M15

HA

HHA013

Wiring Diagram — A/C —

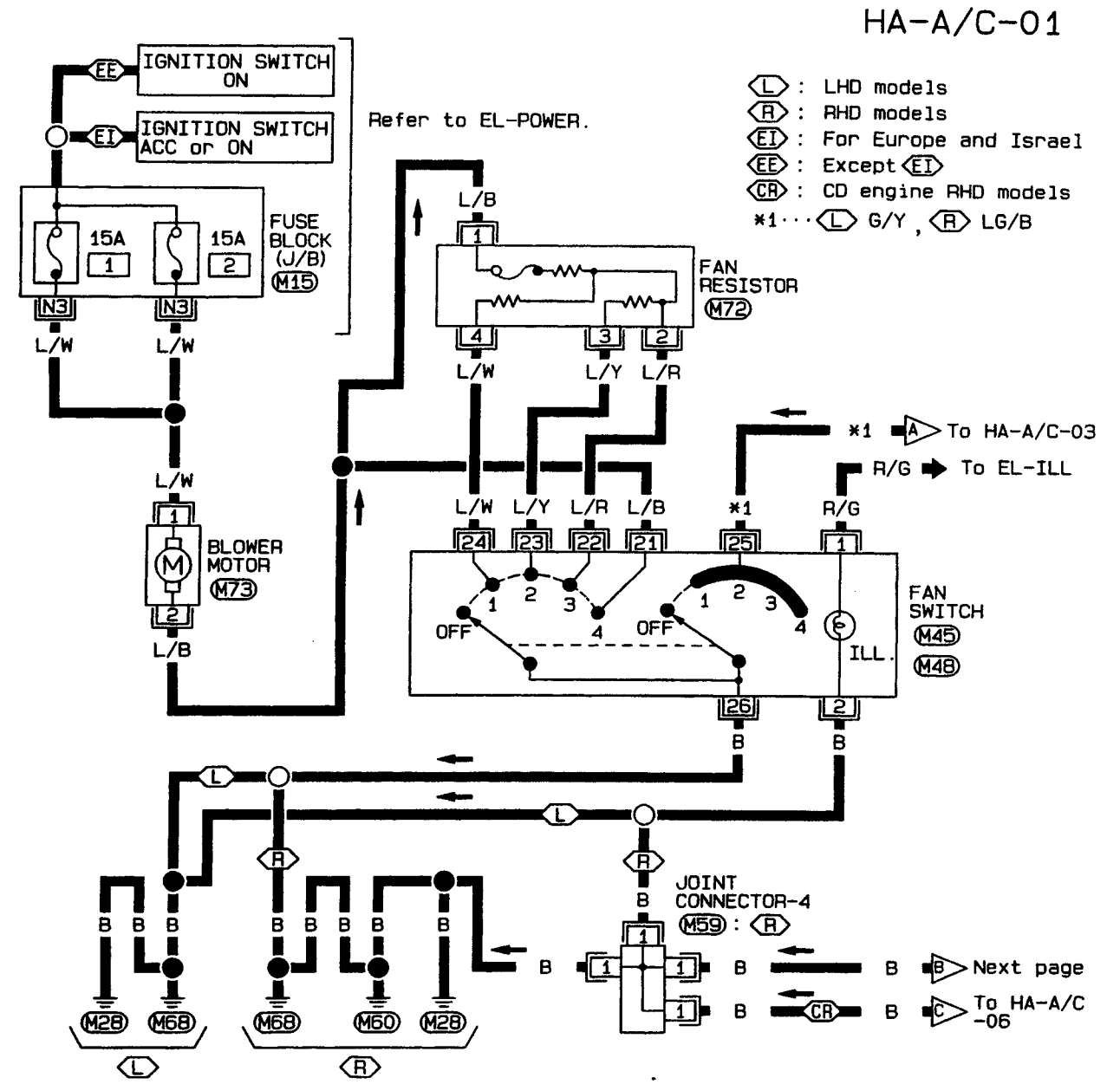

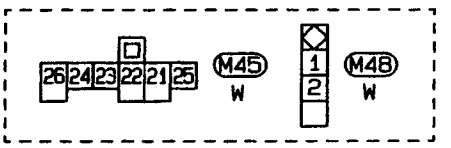

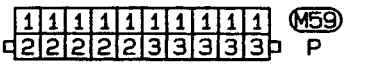

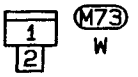

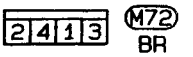

Refer to last page (Foldout page).

M15

HHA002

Wiring Diagram — A/C — (Cont'd)

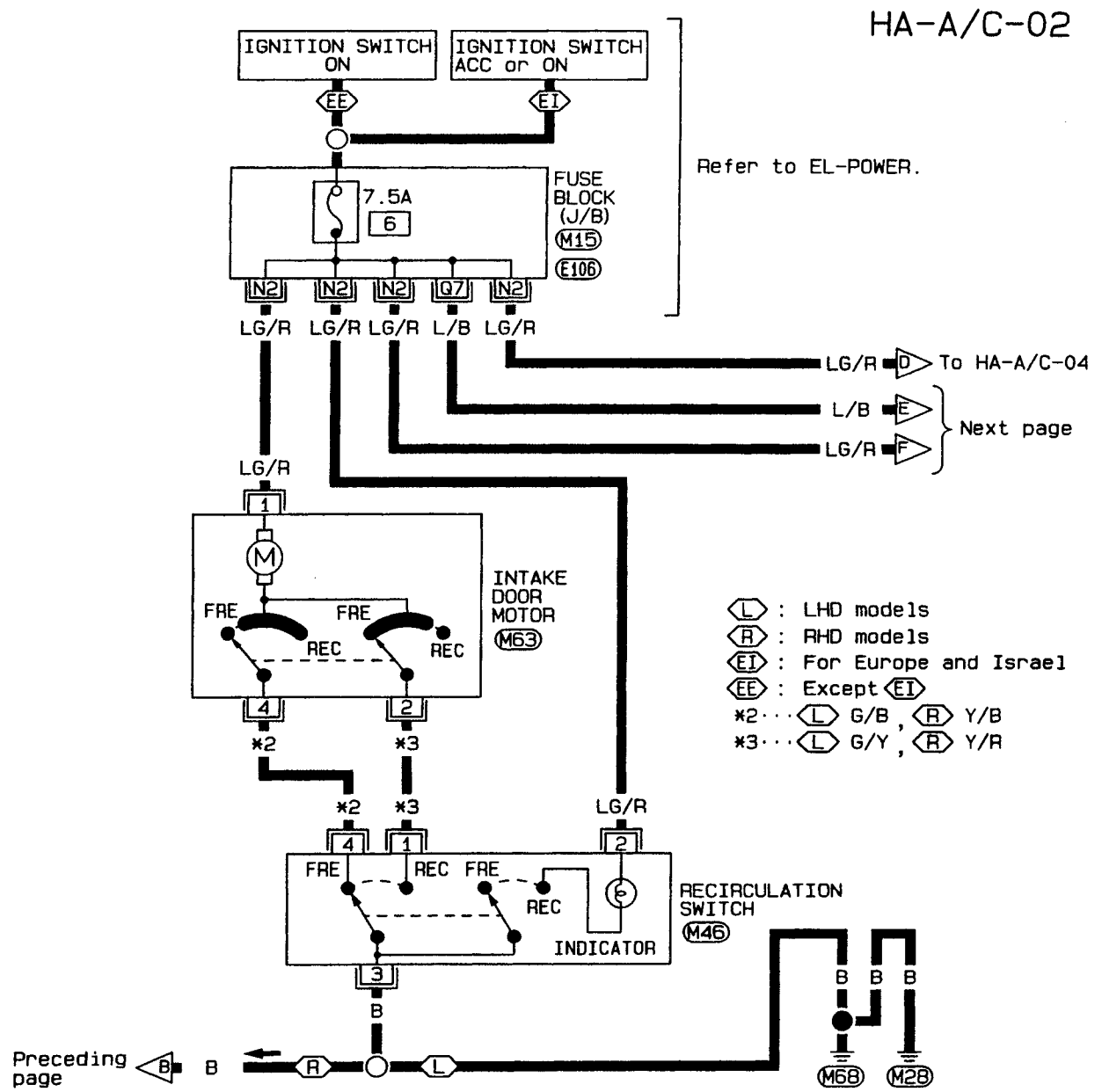

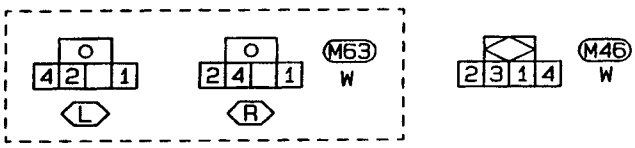

Refer to last page (Foldout page).

M15 , E106

HA

HHA003

Wiring Diagram — A/C — (Cont'd)

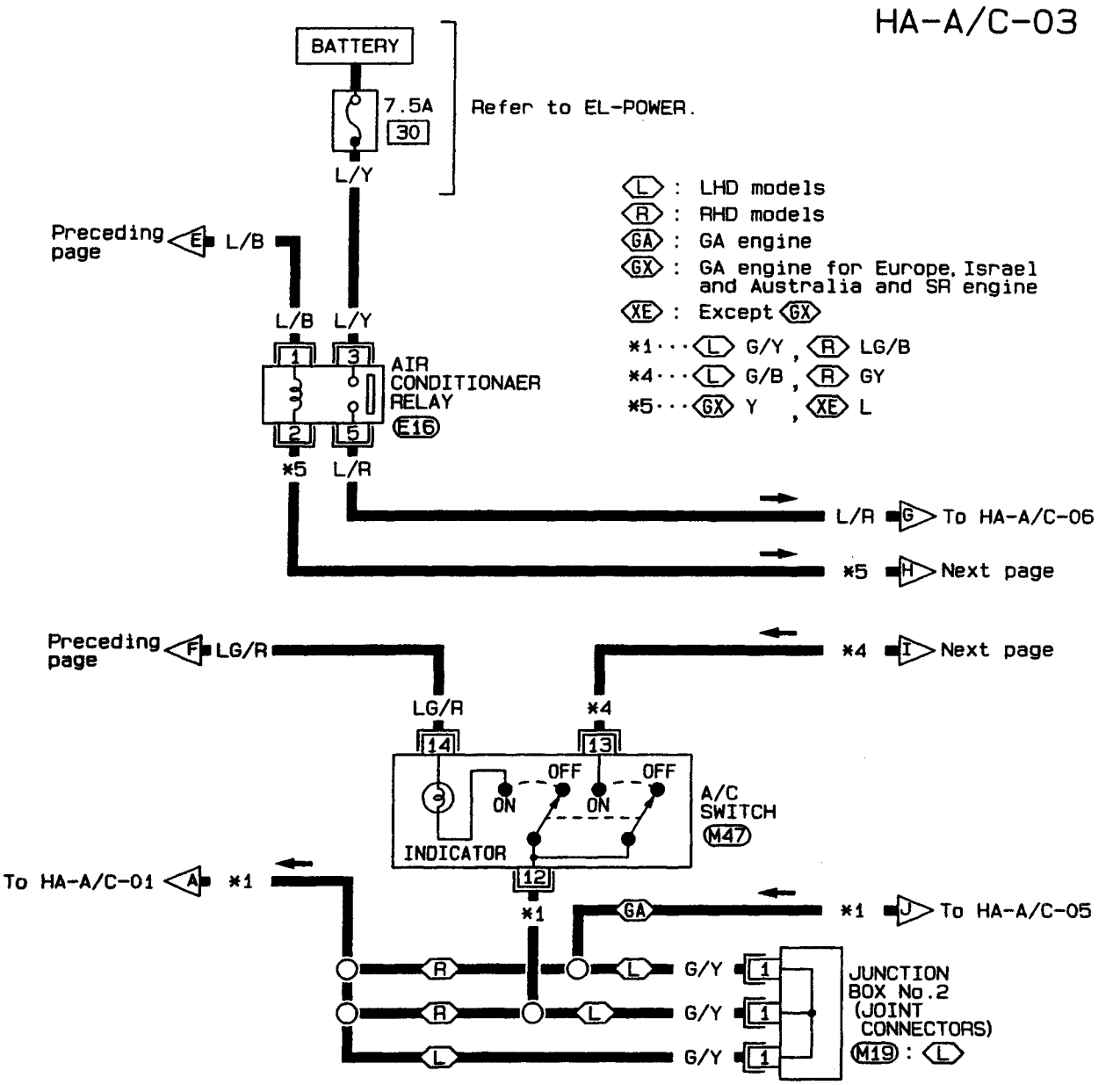

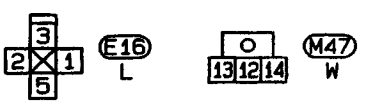

Refer to last page (Foldout page).

M19

HHA004

Wiring Diagram — A/C — (Cont'd)

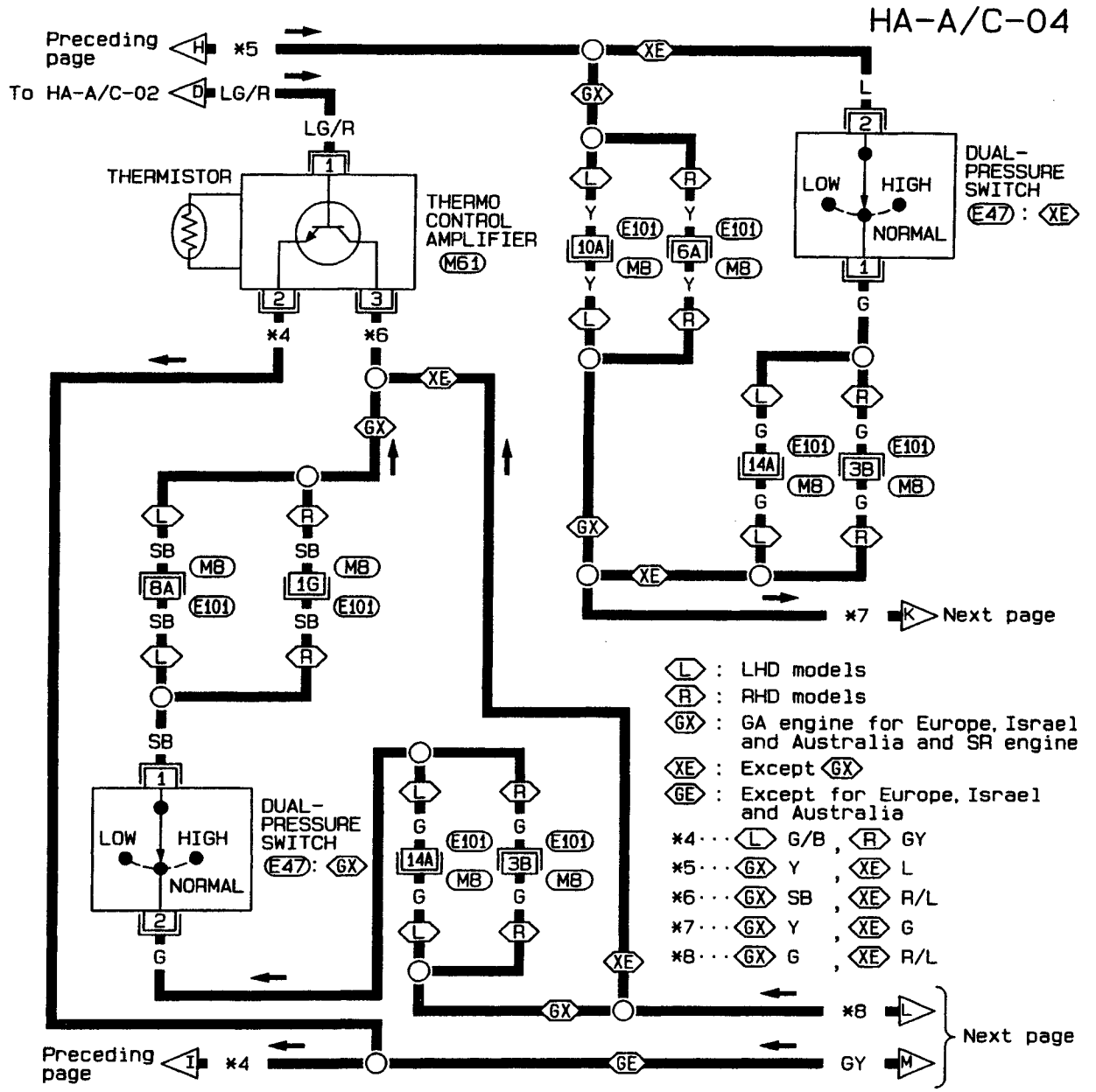

HHA005

Wiring Diagram — A/C — (Cont'd)

HA-A/C-05

- (L) : LHD models
- (R) : RHD models
- (GA) : GA engine
- (CD) : CD engine
- (EI) : For Europe and Israel
- (EE) : Except (EI)
- (AG) : GA engine for Australia
- (EA) : Except (AG)
- (GS) : GA engine and SR engine
- (GE) : Except for Europe, Israel and Australia
- (GX) : GA engine for Europe, Israel and Australia and SR engine
- (XE) : Except (GX)
- *1 ··· (L) G/Y , (R) LG/B
- *7 ··· (GX) Y , (XE) G
- *8 ··· (GX) G , (XE) R/L
- *9 ··· (EA) 11 , (AG) 15
- *10 ·· (EA) 41 , (AG) 21
- *11 ·· (EA) 45 , (AG) 35
- *12 ·· (EI) 4 , (EE) 5
- *13 ·· (EI) 5 , (EE) 4

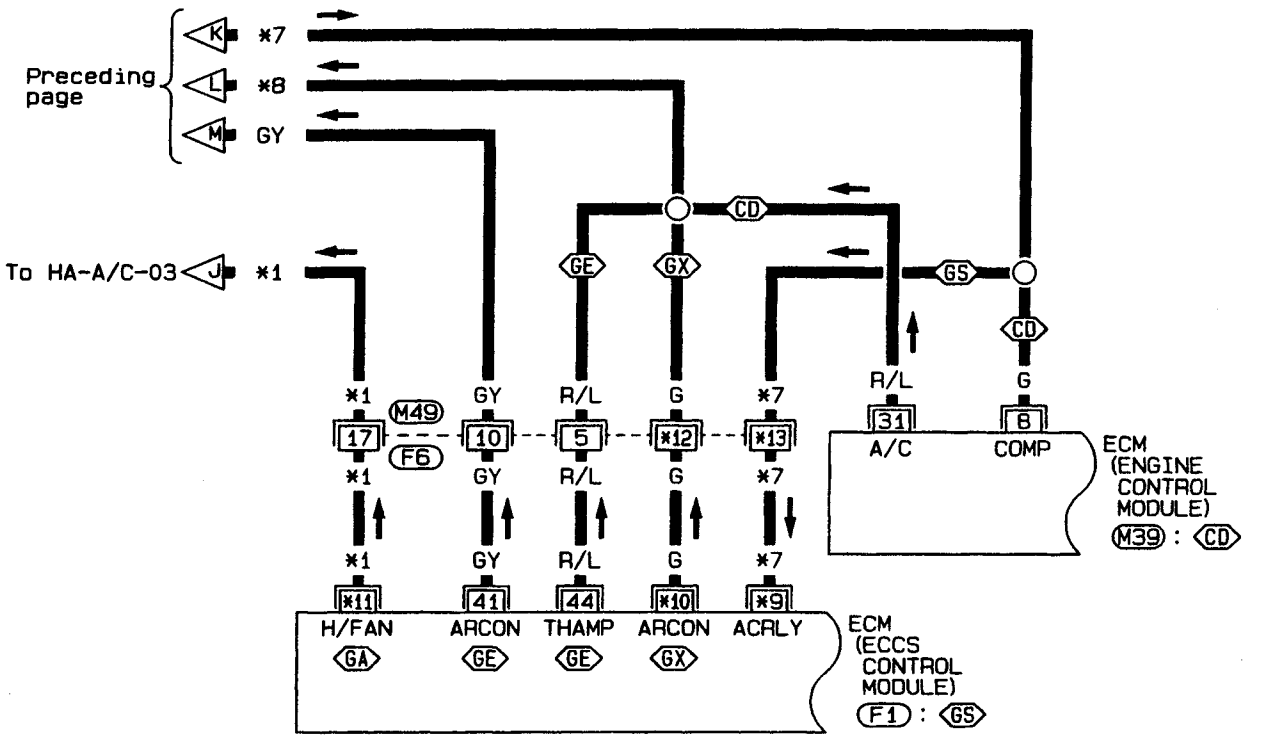

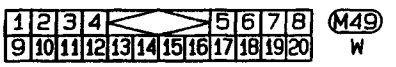

Refer to last page (Foldout page).

F1

M39

HHA006

Wiring Diagram — A/C — (Cont'd)

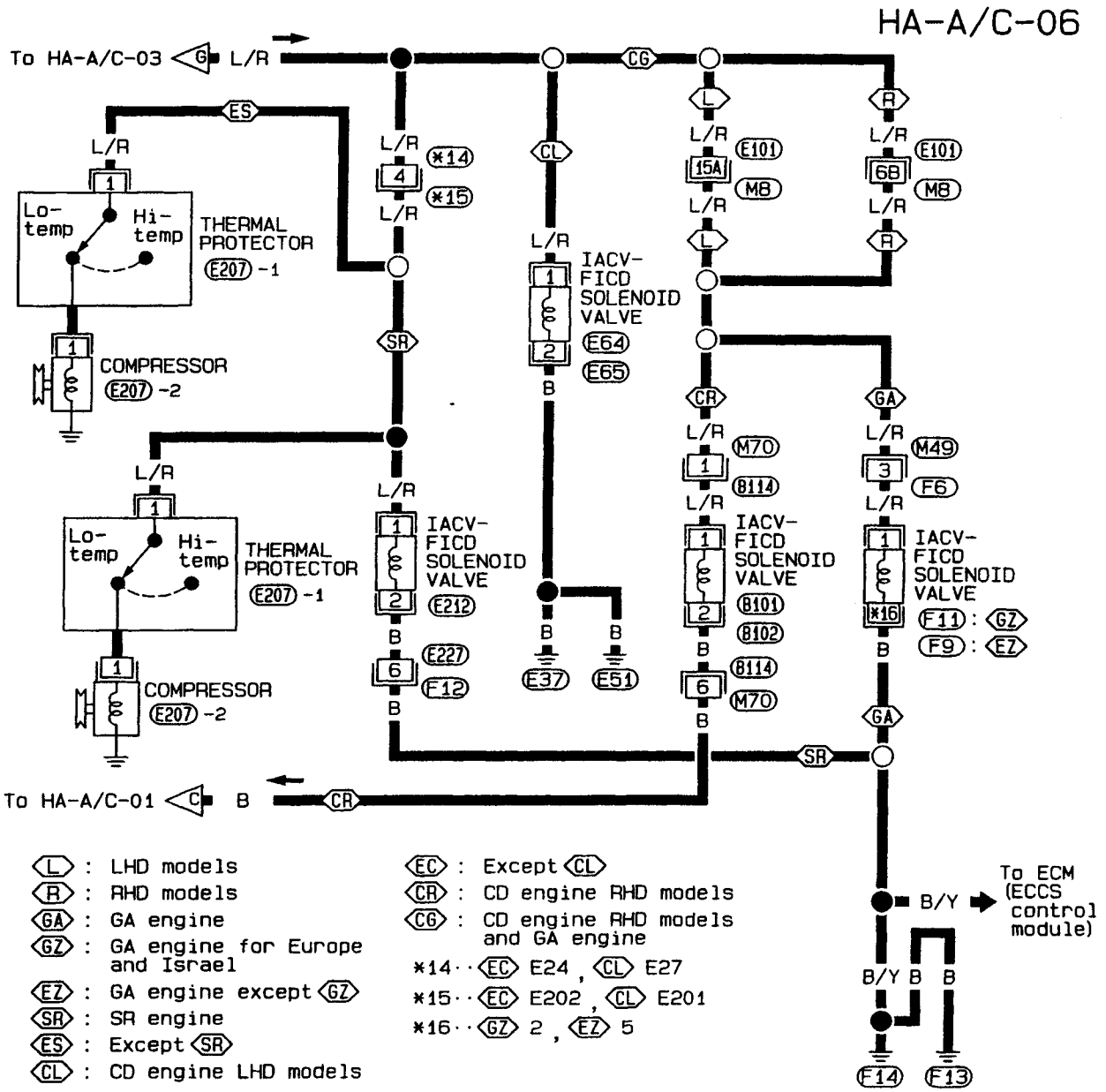

HA

HHA007

COOLING FAN CONTROL

SR20DE engine M/T models, GA engine M/T models, GA engine A/T models — except for Australia

HA-A/C-07

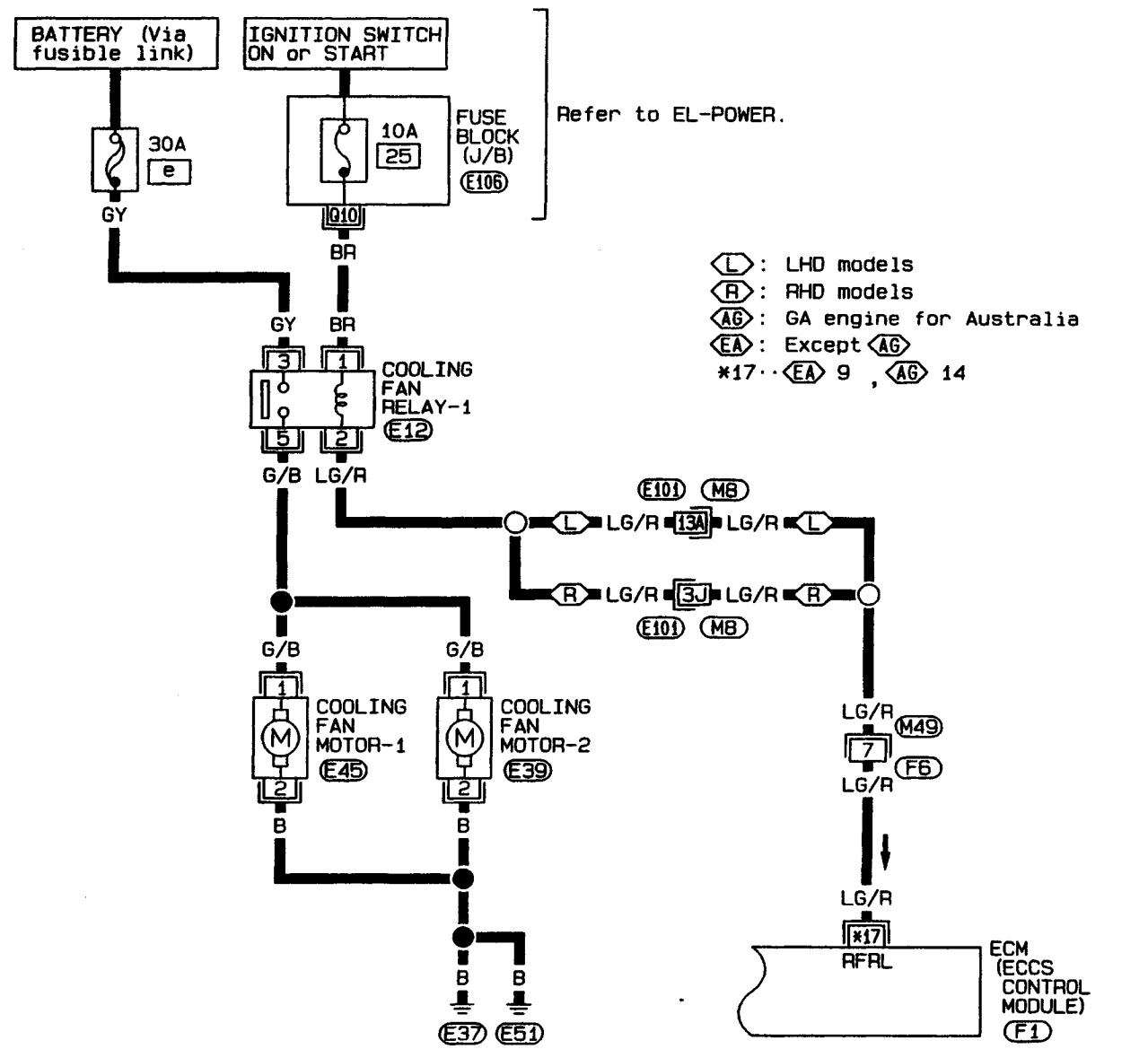

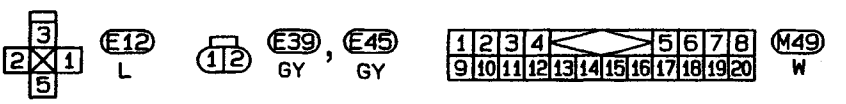

Refer to last page (Foldout page).

M8, E101

E106

F1

HHA008

Wiring Diagram — A/C — (Cont'd)

GA engine A/T models — for Australia

HA-A/C-08

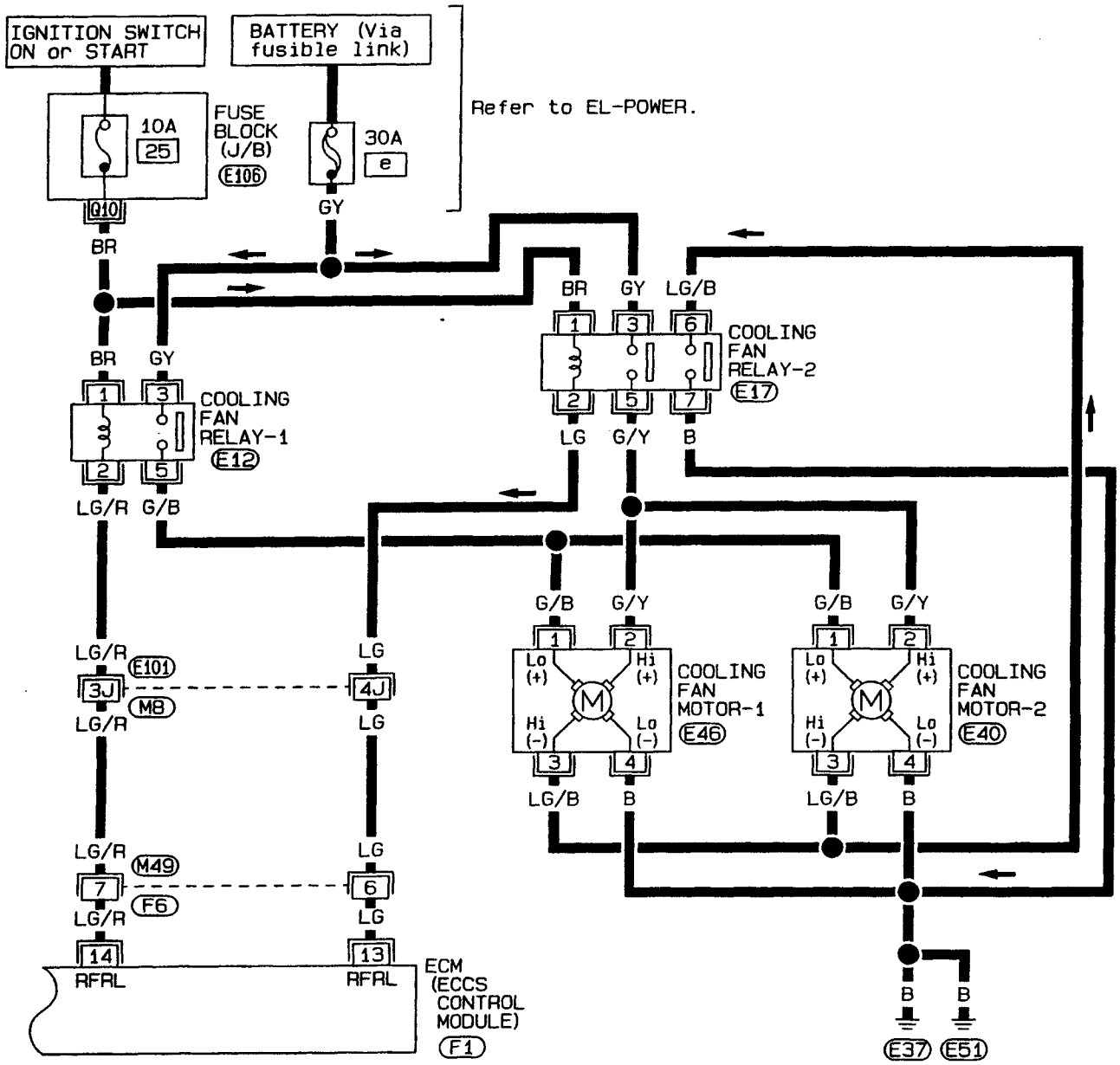

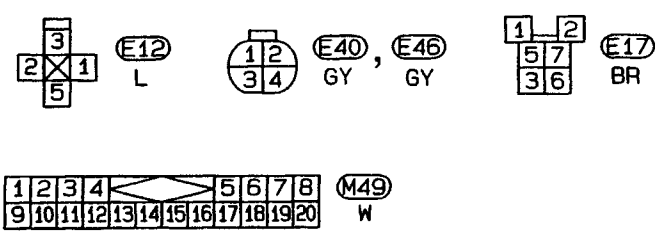

Refer to last page (Foldout page).

M8, E101

E106

F1

HA

HHA009

Wiring Diagram — A/C — (Cont'd)

GA engine A/T models — for Europe LHD without daytime light system (with dealer installed towing kit)

HA-A/C-09

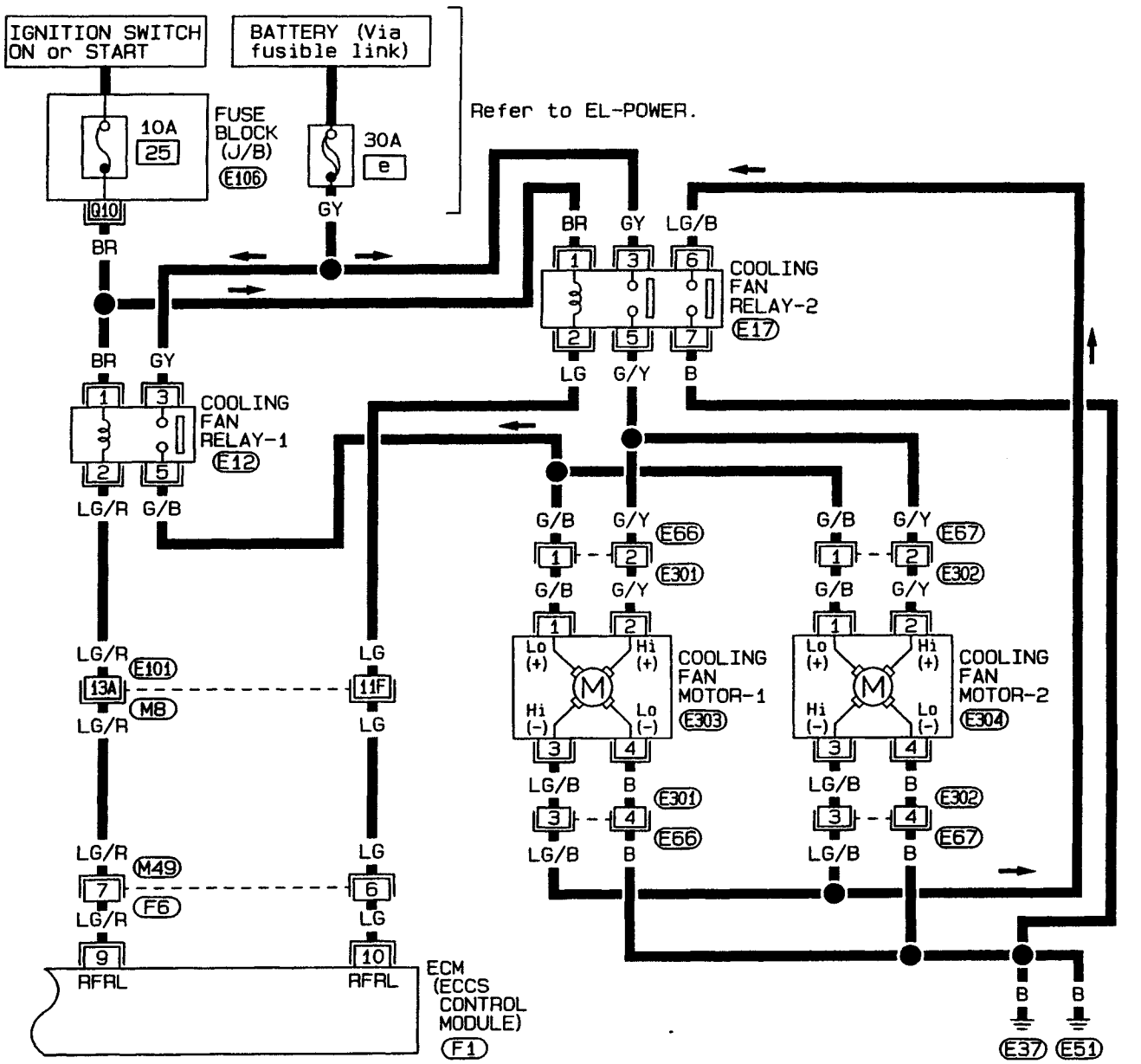

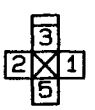
E12
L

E66, E67, E303, E304
GY GY GY GY

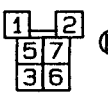
E17
BR

M49
W

Refer to last page (Foldout page).

M8, E101

E106

F1

HHA047

Wiring Diagram — A/C — (Cont'd)

SR20DE engine A/T models

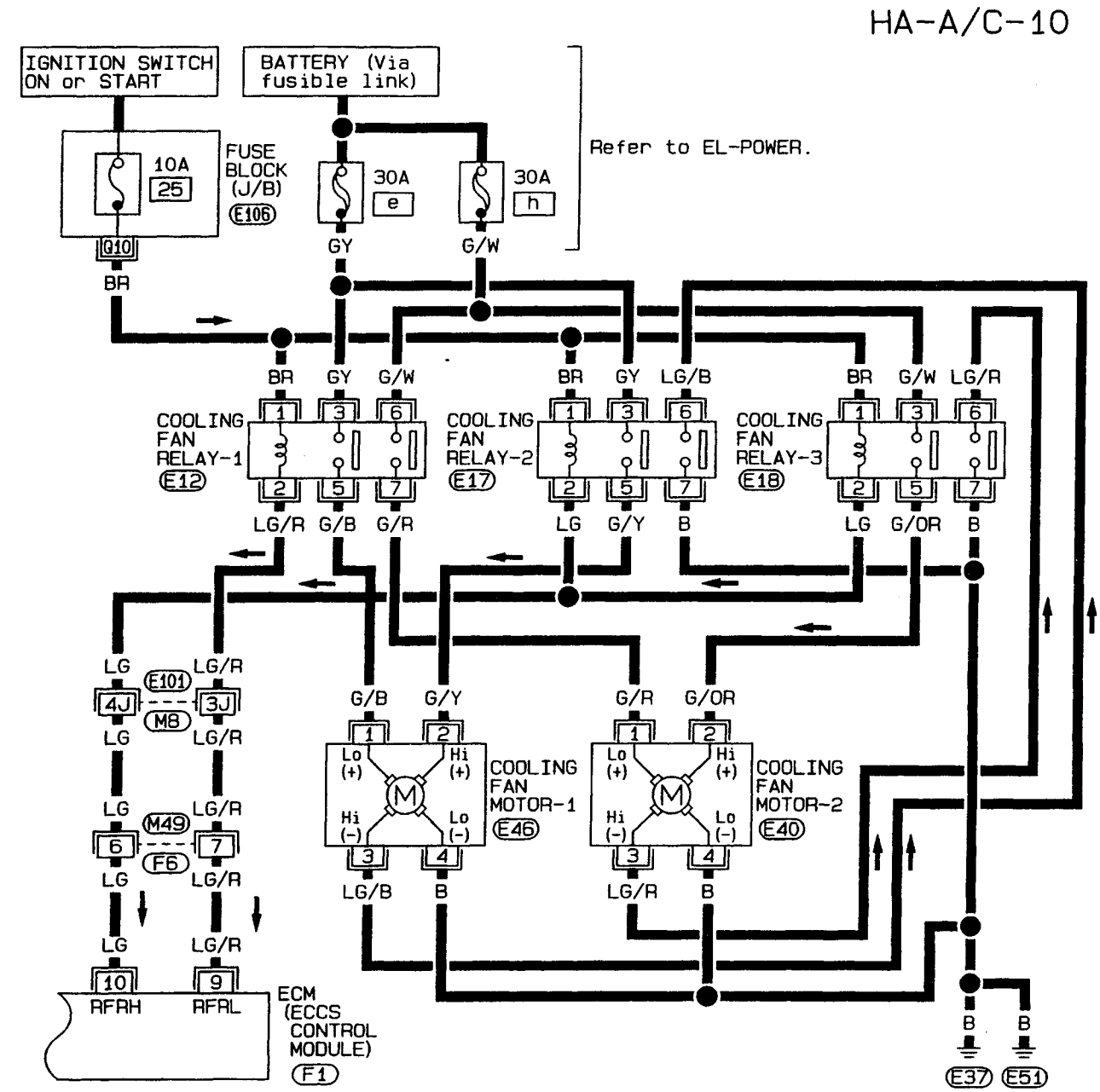

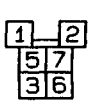
E12, E17, E18
BR BR BR

E40, E46
GY GY

M49
W

Refer to last page (Foldout page).
M8, E101
E106
F1

HA

HHA010

Wiring Diagram — A/C — (Cont'd)

CD20 engine models

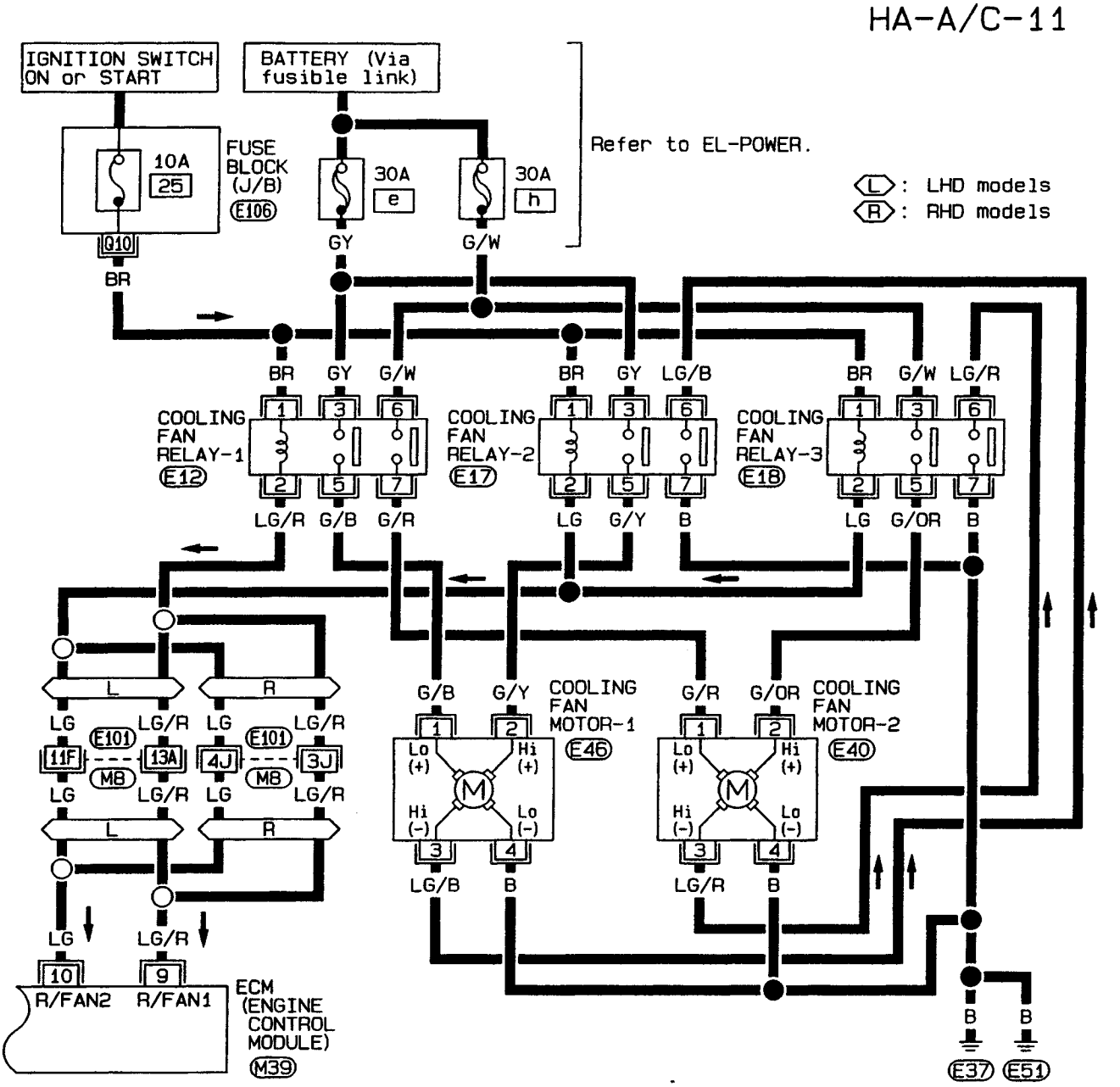

E12, E17, E18
BR BR BR

E40, E46
GY GY

Refer to last page (Foldout page).

M8, E101

E106

M39

HHA011

Main Power Supply and Ground Circuit Check

POWER SUPPLY CIRCUIT CHECK FOR A/C SYSTEM

Check power supply circuit for air conditioning system.
Refer to "POWER SUPPLY ROUTING" in EL section and Wiring Diagram.

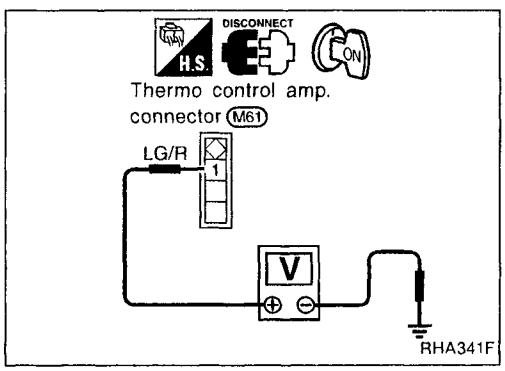

THERMO CONTROL AMP. CHECK

Check power supply circuit for thermo control amp. with ignition switch ON.

1: Disconnect thermo control amp. harness connector.
2. Connect voltmeter from harness side.
3. Measure voltage across terminal No. ① and body ground.

Voltmeter terminal		Voltage
⊕	⊖	
①	Body ground	Approx. 12V

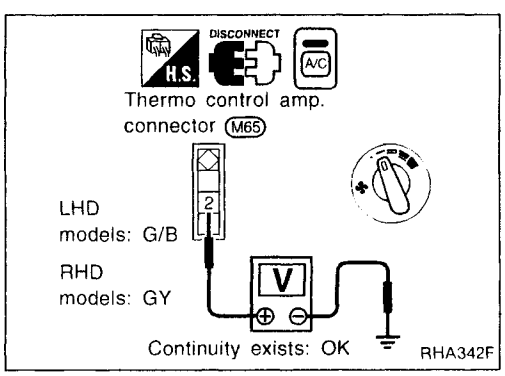

Turn A/C and fan switches ON. Check body ground circuit for thermo control amp.

1. Disconnect thermo control amp. harness connector.
2. Connect ohmmeter from harness side.
3. Check for continuity between terminal No. ② and body ground.

Ohmmeter terminal		Continuity
⊕	⊖	
②	Body ground	Yes

HA

	INCIDENT	Flow chart No.
1	Fan fails to rotate.	1
2	Fan does not rotate at 1-speed.	2
3	Fan does not rotate at 2-speed.	3
4	Fan does not rotate at 3-speed.	4
5	Fan does not rotate at 4-speed.	5

Diagnostic Procedure 1

SYMPTOM: Blower motor does not rotate.

- **Perform PRELIMINARY CHECK 1 before referring to the following flow chart.**

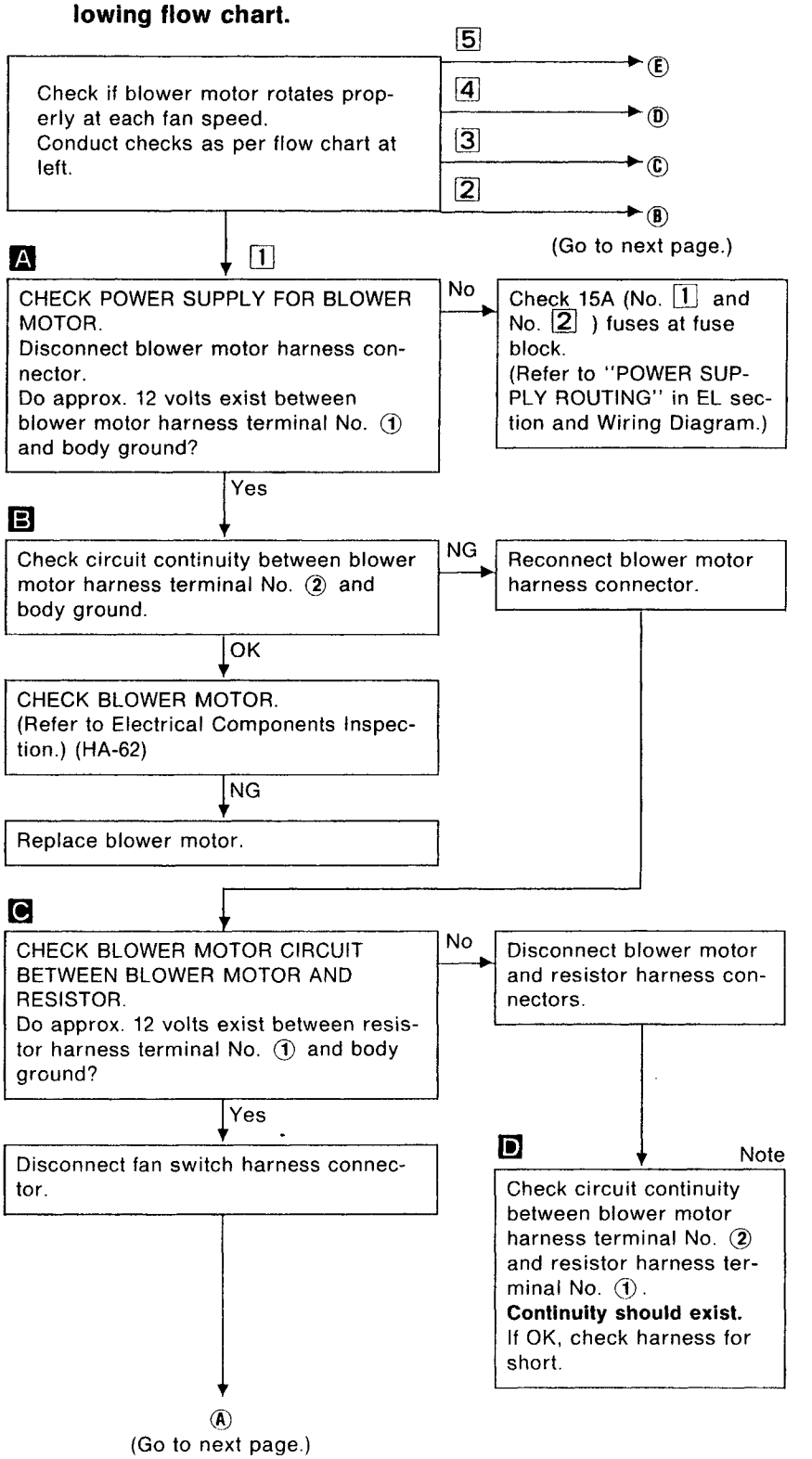

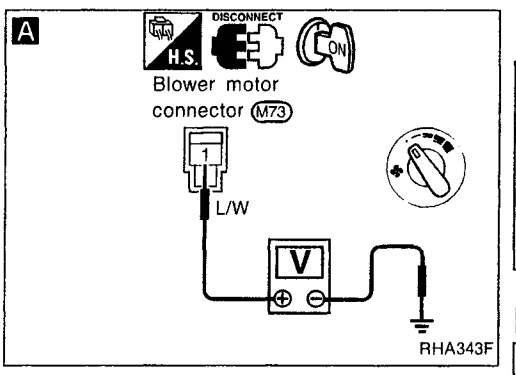

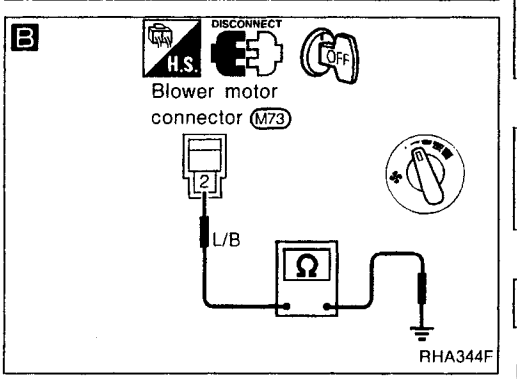

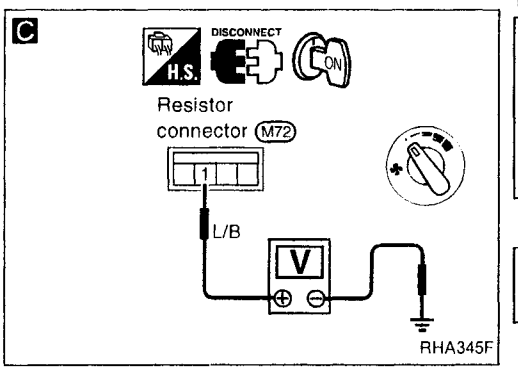

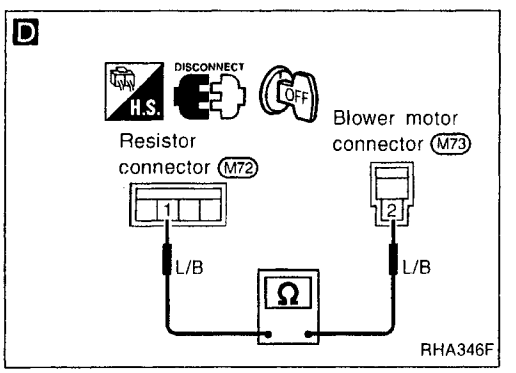

Note:
If the result is NG after checking circuit continuity, repair harness or connector.

Diagnostic Procedure 1 (Cont'd)

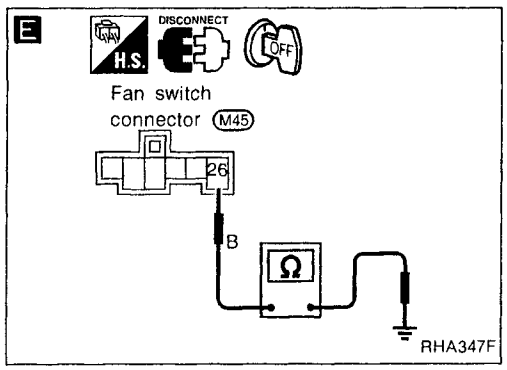

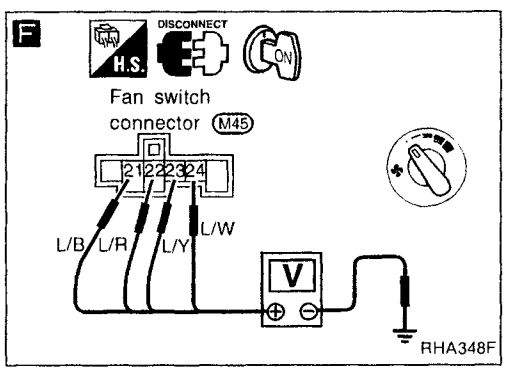

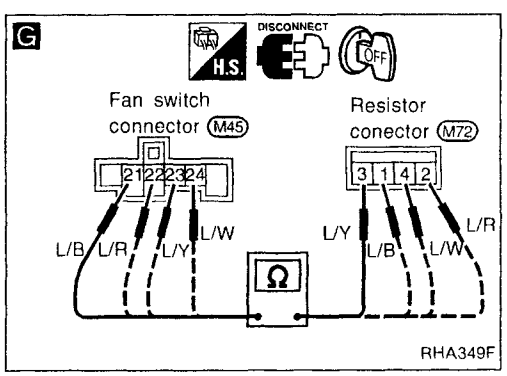

Ⓐ

E

Check circuit continuity between fan switch harness terminal No. ㉖ and body ground. (Note)

OK ↓

CHECK RESISTOR AFTER DISCONNECTING IT.
(Refer to Electrical Components Inspection.) (HA-63)

2 ← Ⓑ
3 ← Ⓒ
4 ← Ⓓ

OK ↓ / NG → Replace resistor.

Reconnect resistor harness connector.

1 2 3 4 5 Ⓔ

F

CHECK FAN SWITCH CIRCUIT.
Do approx. 12 volts exist between each fan switch harness terminal and body ground?

Flow chart No.	Terminal No. ⊕	Terminal No. ⊖	Voltage
2	㉔	Body ground	Approx. 12V
3	㉓		
4	㉒		
5	㉑		

Yes ↓ / No →

G

Check circuit continuity between fan switch harness terminal and resistor harness terminal. (Note)

Terminal No. Fan switch	Terminal No. Resistor	Continuity
㉑	①	Yes
㉒	②	
㉓	③	
㉔	④	

If OK, check harness for short.

CHECK FAN SWITCH AFTER DISCONNECTING IT.
(Refer to Electrical Components Inspection.) (HA-62)

NG → Replace fan switch.

Note:
If the result is NG after checking circuit continuity, repair harness or connector.

HA

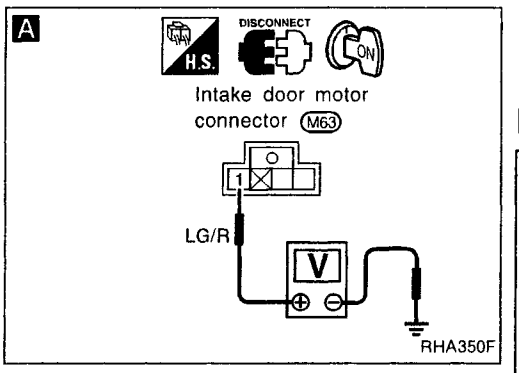

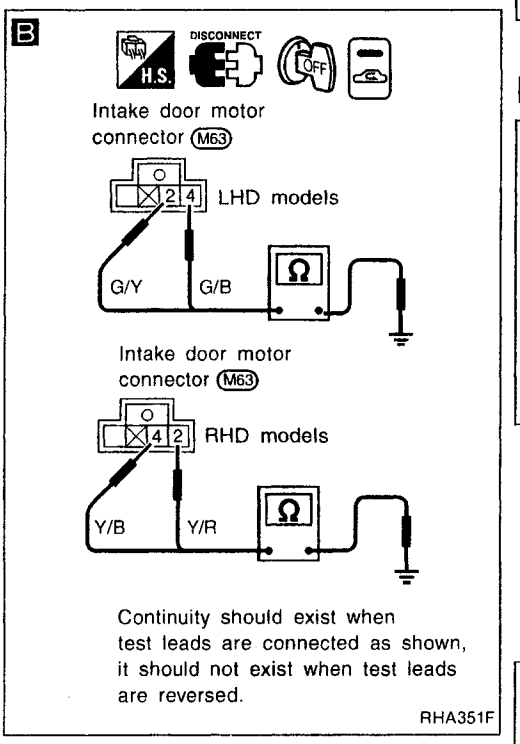

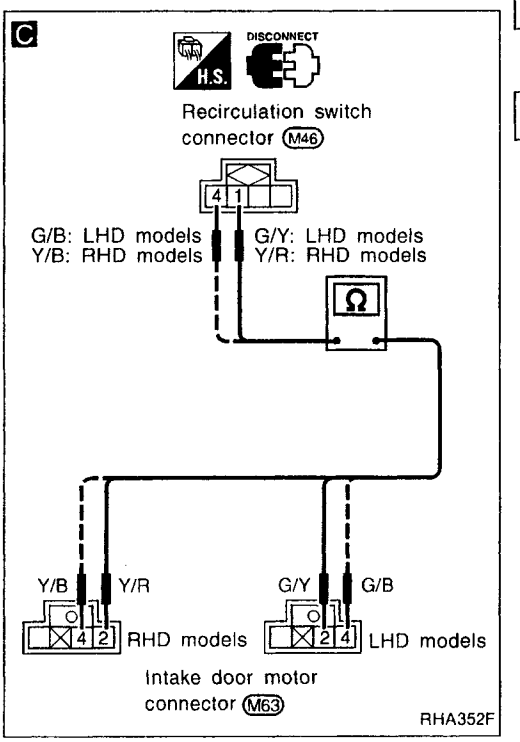

Diagnostic Procedure 2

SYMPTOM: Intake door does not change.

A

CHECK POWER SUPPLY FOR INTAKE DOOR MOTOR.
Disconnect intake door motor harness connector.
Do approx. 12 volts exist between intake door motor harness terminal No. ① and body ground?

No → Check 7.5A (No. 6) fuse at fuse block. (Refer to "POWER SUPPLY ROUTING" in EL section and Wiring Diagram.)

Yes ↓

B

CHECK BODY GROUND CIRCUIT FOR INTAKE DOOR MOTOR.
Turn recirculation switch ON. Does continuity exist between intake door motor harness terminal ② and body ground?
Turn recirculation switch OFF. Does continuity exist between intake door motor harness terminal ④ and body ground?

No → Disconnect recirculation switch harness connector.

↓

C

Note

Check continuity between recirculation switch harness terminal ① (④) and intake door motor harness terminal ② (④).
Continuity should exist.
If OK, check harness for short.

OK ↓

Ⓐ
(Go to next page.)

Yes ↓

CHECK INTAKE DOOR LINKAGE.
Refer to Control Linkage Adjustment. (HA-65)

OK ↓

Replace intake door motor.

Note:
If the result is NG after checking circuit continuity, repair harness or connector.

Diagnostic Procedure 2 (Cont'd)

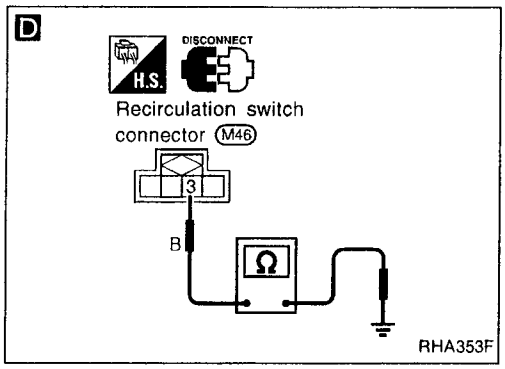

Ⓐ

D

Note

Check circuit continuity between recirculation switch harness terminal No. ③ and body ground.
Continuity should exist.
If OK, check harness for short.

OK

CHECK RECIRCULATION SWITCH.
(Refer to Electrical Components Inspection.) (HA-63)

NG → Replace recirculation switch.

Note:
If the result is NG after checking circuit continuity, repair harness or connector.

HA

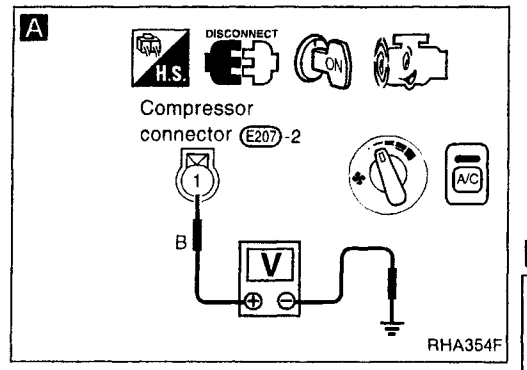

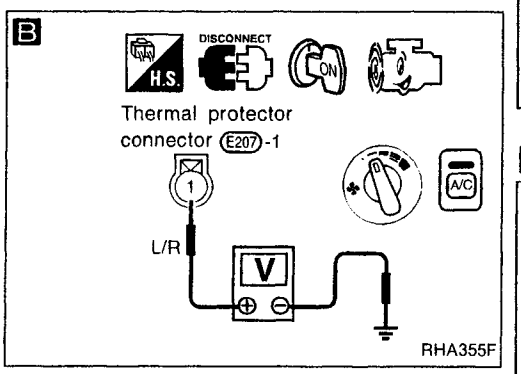

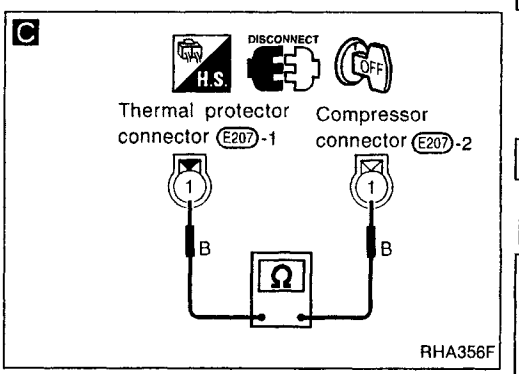

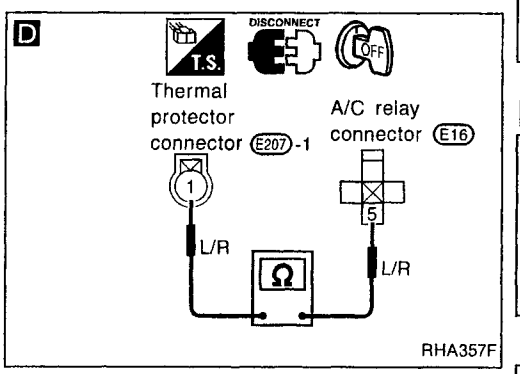

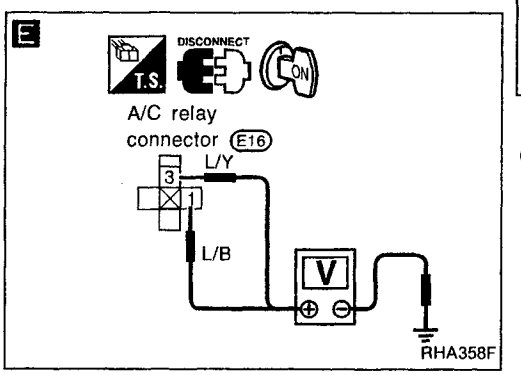

Diagnostic Procedure 3

SYMPTOM: Magnet clutch does not engage when A/C switch and fan switch are ON. — For GA and SR engines

- **Perform PRELIMINARY CHECK 1 before referring to the following flow chart.**

A

CHECK POWER SUPPLY FOR COMPRESSOR.
Disconnect compressor harness connector.
Do approx. 12 volts exist between compressor harness terminal ① and body ground?

→ Yes → Check magnet clutch coil.
→ NG → Replace magnet clutch. Refer to HA-77, HA-80.

↓ No

B

CHECK POWER SUPPLY FOR THERMAL PROTECTOR.
Disconnect thermal protector harness connector.
Do approx. 12V exist between thermal protector harness terminal ① and body ground?

→ Yes → **C**

CHECK THERMAL PROTECTOR.
Check circuit continuity between thermal protector harness terminal ① and compressor harness terminal ①.
Continuity should exist.
If OK, check harness for short.

→ NG → Replace thermal protector.

↓ No

Disconnect A/C relay.

↓

D Note

CHECK CIRCUIT CONTINUITY BETWEEN A/C RELAY HARNESS TERMINAL ⑤ AND THERMAL PROTECTOR HARNESS TERMINAL ①.
Continuity should exist.
If OK, check harness for short.

↓ OK

E

CHECK POWER SUPPLY FOR A/C RELAY.
Disconnect A/C relay.
Do approx. 12 volts exist between A/C relay harness terminals ①, ③ and body ground?

→ No → CHECK POWER SUPPLY CIRCUIT AND 7.5A (No. 6 and 30) FUSES AT FUSE BLOCK.
Refer to EL section ("Wiring Diagram", "POWER SUPPLY ROUTING").

↓ Yes

CHECK A/C RELAY AFTER DISCONNECTING IT.
Refer to HA-64.

→ NG → Replace A/C relay.

↓ OK

Ⓐ: GA engine (for Europe, Israel and Australia) and SR engine
Ⓒ: Except above

Note:
If the result is NG after checking circuit continuity, repair harness or connector.

Diagnostic Procedure 3 (Cont'd)

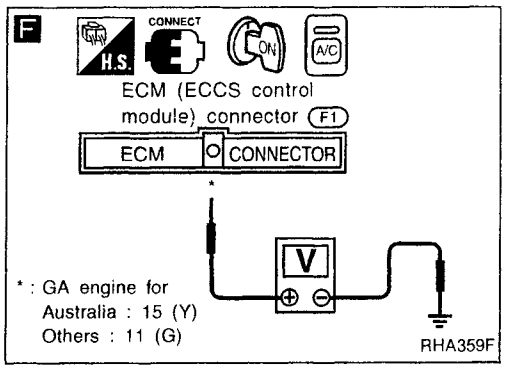

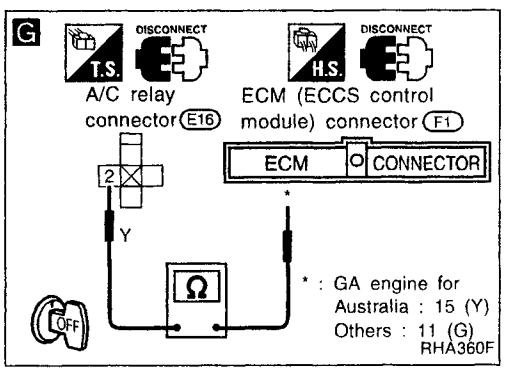

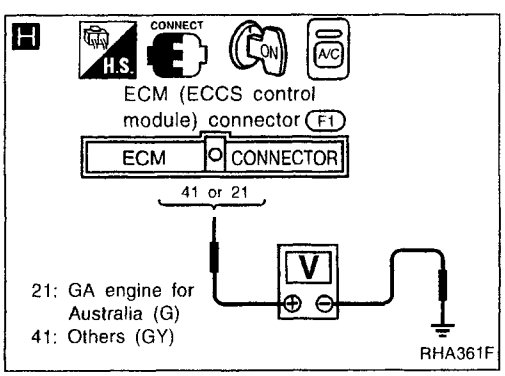

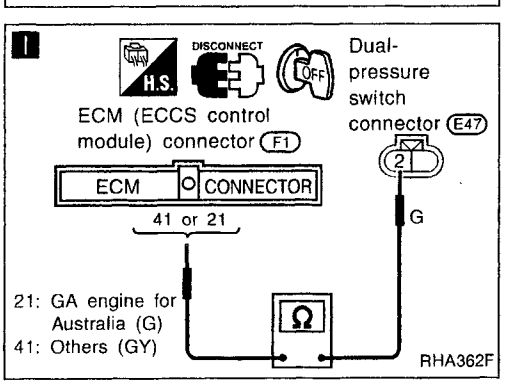

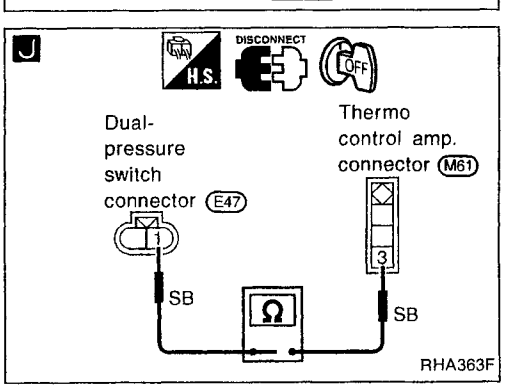

Ⓐ

Reconnect A/C relay.

F

CHECK COIL SIDE CIRCUIT OF A/C RELAY.
Do approx. 12 volts exist between ECM (ECCS control module) harness terminal ⑪ or ⑮ and body ground?

No → Disconnect A/C relay. Disconnect ECM (ECCS control module) harness connector.

G Note

CHECK CIRCUIT CONTINUITY BETWEEN A/C RELAY HARNESS TERMINAL ② AND ECM (ECCS CONTROL MODULE) HARNESS TERMINAL ⑪ or ⑮.
Continuity should exist.
If OK, check harness for short.

Yes

H

CHECK VOLTAGE FOR ECM (ECCS control module).
Do approx. 12 volts exist between ECM (ECCS control module) harness terminal ㊶, or ㉑ and body ground?

No → CHECK ECM (ECCS control module). Refer to EC section.

Yes

Disconnect ECM (ECCS control module) harness connector.
Disconnect dual-pressure switch harness connector.

I Note

CHECK CIRCUIT CONTINUITY BETWEEN ECM (ECCS CONTROL MODULE) HARNESS TERMINAL ㊶ or ㉑ AND DUAL-PRESSURE SWITCH HARNESS TERMINAL ②.
Continuity should exist.
If OK, check harness for short.

OK

CHECK DUAL-PRESSURE SWITCH.
Refer to HA-64.

NG → Replace dual-pressure switch.

OK

Disconnect thermo control amp. harness connector.

J Note

CHECK CIRCUIT CONTINUITY BETWEEN DUAL-PRESSURE SWITCH HARNESS TERMINAL ② AND THERMO CONTROL AMP. HARNESS TERMINAL ③.
Continuity should exist.
If OK, check harness for short.

OK

Reconnect dual-pressure switch harness connector.

Ⓓ (Go to **O** .)

Note:
If the result is NG after checking circuit continuity, repair harness or connector.

HA

Diagnostic Procedure 3 (Cont'd)

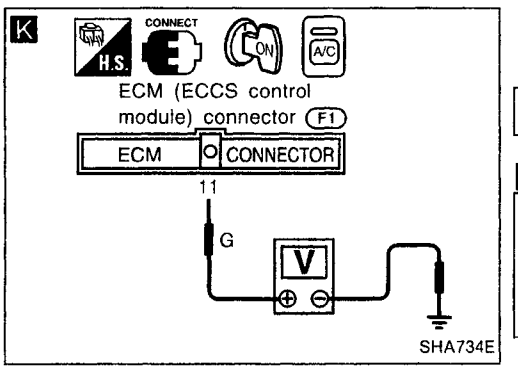

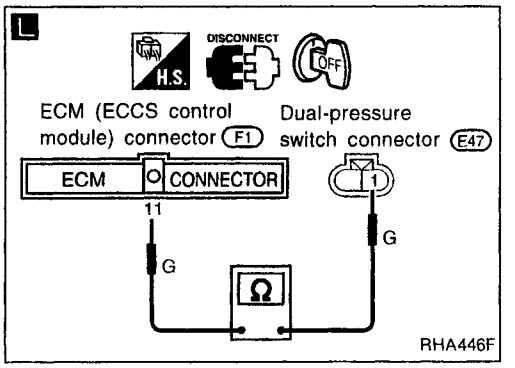

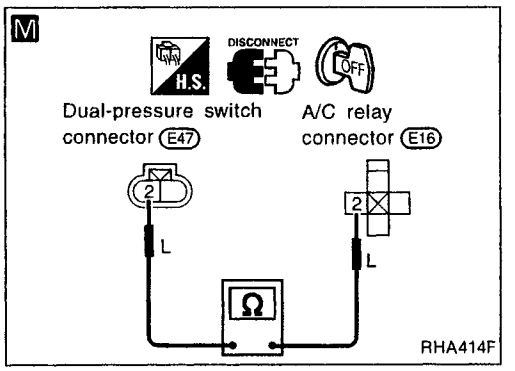

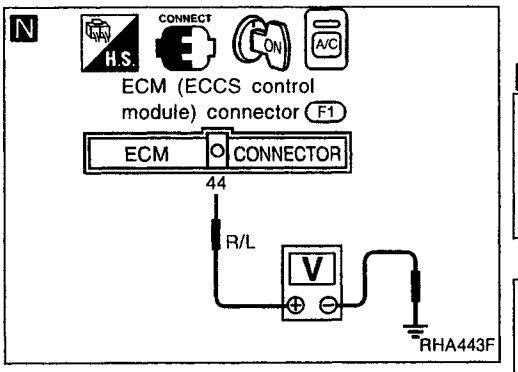

Ⓒ

Reconnect A/C relay.

K

CHECK COIL SIDE CIRCUIT OF A/C RELAY.
Do approx. 12 volts exist between ECM (ECCS control module) harness terminal ⑪ and body ground?

No → Disconnect ECM (ECCS control module) harness connector.
Disconnect dual-pressure switch harness connector.

L Note

CHECK CIRCUIT CONTINUITY BETWEEN ECM (ECCS CONTROL MODULE) HARNESS TERMINAL ⑪ AND DUAL-PRESSURE SWITCH HARNESS TERMINAL ①.
Continuity should exist.
If OK, check harness for short.

OK → CHECK DUAL-PRESSURE SWITCH. Refer to HA-64.

NG → Replace dual-pressure switch.

M Note

CHECK CIRCUIT CONTINUITY BETWEEN A/C RELAY HARNESS TERMINAL ② AND DUAL-PRESSURE SWITCH HARNESS TERMINAL ②.
Continuity should exist.
If OK, check harness for short.

Yes →

N

CHECK VOLTAGE FOR ECM (ECCS control module).
Do approx. 12 volts exist between ECM (ECCS control module) harness terminal No. ㊹ and body ground?

No → CHECK ECM (ECCS control module). (Refer to EC section.)

Yes → Disconnect ECM (ECCS control module) harness connector.
Disconnect thermo control amp. harness connector.

Yes → Ⓓ

Note:
If the result is NG after checking circuit continuity, repair harness or connector.

Diagnostic Procedure 3 (Cont'd)

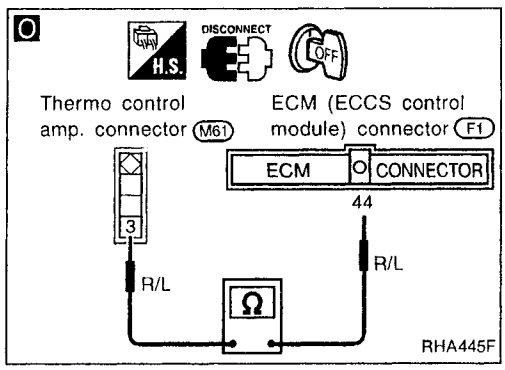

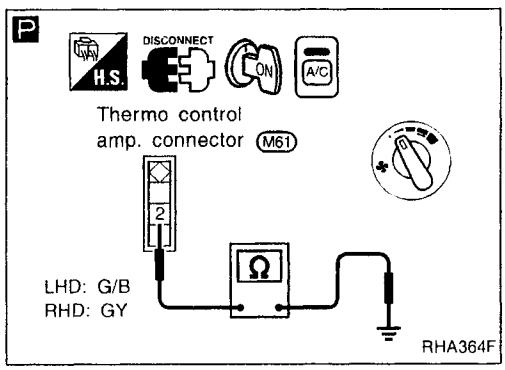

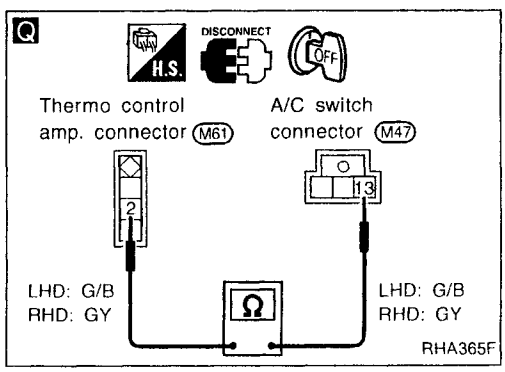

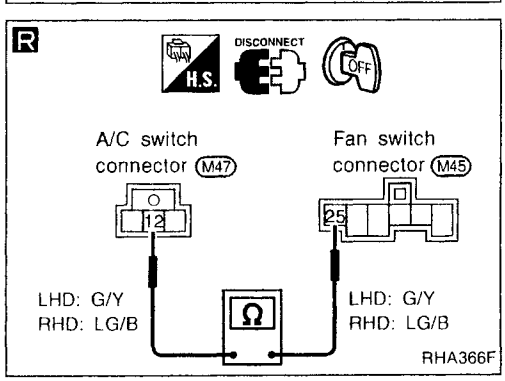

Ⓓ

O — Note

CHECK CIRCUIT CONTINUITY BETWEEN ECM (ECCS CONTROL MODULE) HARNESS TERMINAL ㊹ AND THERMO CONTROL AMP. HARNESS TERMINAL ③.
Continuity should exist.
If OK, check harness for short.

↓ OK

Reconnect thermo control amp. harness connector.

Ⓑ — Note

CHECK POWER SUPPLY FOR THERMO CONTROL AMP.
Refer to HA-49.

P

CHECK BODY GROUND CIRCUIT FOR THERMO CONTROL AMP.
Disconnect thermo control amp. harness connector.
Does continuity exist between thermo control amp. harness terminal ② and body ground?

→ Yes → Replace thermo control amp.

↓ No

Disconnect A/C switch harness connector.

Q — Note

CHECK CIRCUIT CONTINUITY BETWEEN THERMO CONTROL AMP. HARNESS TERMINAL ② AND A/C SWITCH HARNESS TERMINAL ⑬.
Continuity should exist.
If OK, check harness for short.

↓ OK

CHECK A/C SWITCH.
Refer to HA-63.

→ NG → Replace A/C switch.

↓ OK

Disconnect fan switch harness connector.

R — Note

CHECK CIRCUIT CONTINUITY BETWEEN A/C SWITCH HARNESS TERMINAL ⑫ AND FAN SWITCH HARNESS TERMINAL ㉕.

↓ OK

Ⓔ

Note:
If the result is NG or No after checking circuit continuity, repair harness or connector.

HA

Diagnostic Procedure 3 (Cont'd)

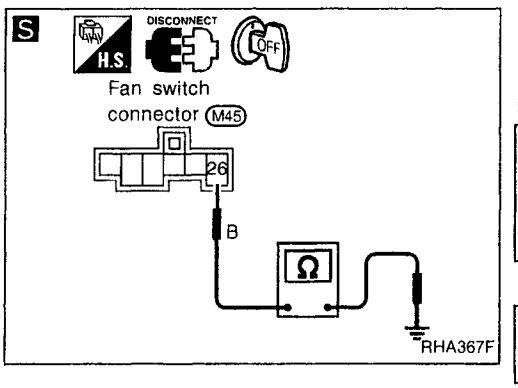

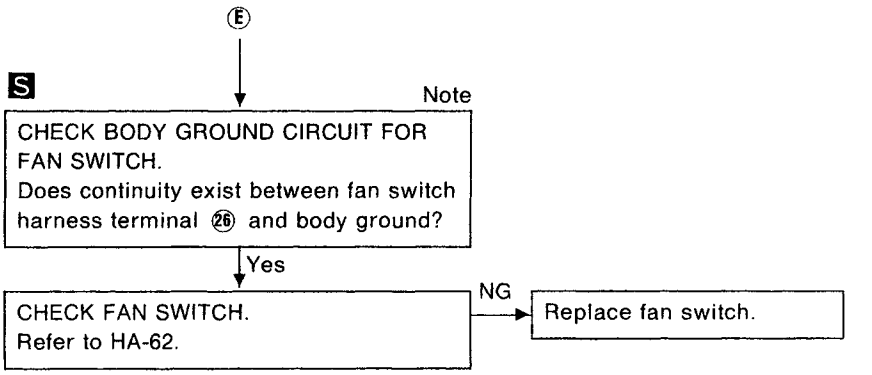

Note:
If the result is No after checking circuit continuity, repair harness or connector.

Diagnostic Procedure 3 (Cont'd)

SYMPTOM: Magnet clutch does not engage when A/C switch and fan switch are ON. — For CD engine

- **Perform PRELIMINARY CHECK 1 before referring to the following flow chart.**

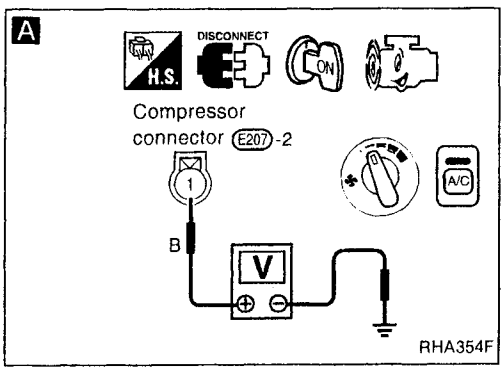

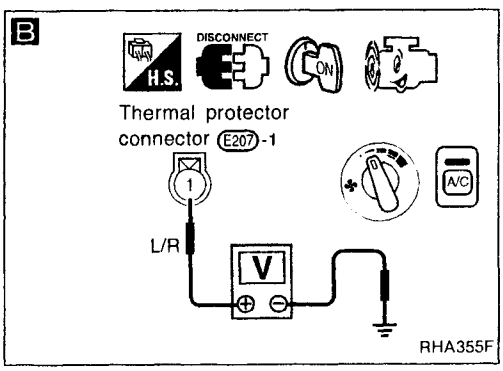

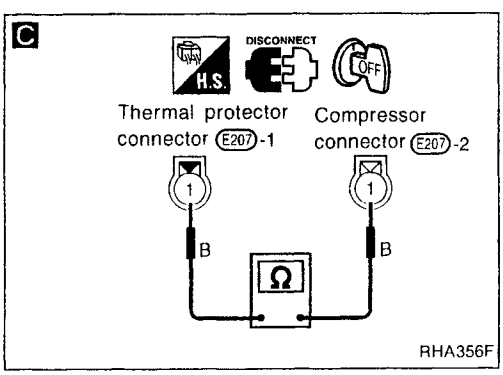

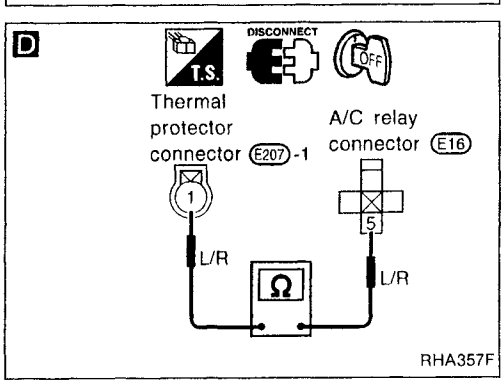

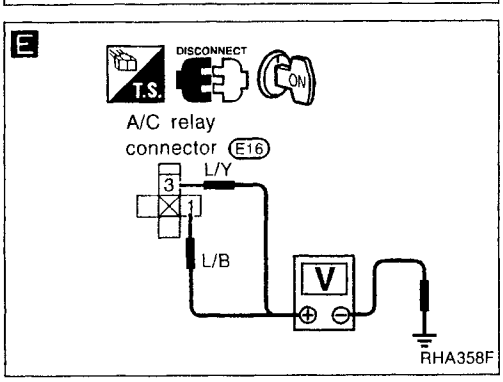

A

CHECK POWER SUPPLY FOR COMPRESSOR.
Disconnect compressor harness connector.
Do approx. 12 volts exist between compressor harness terminal ① and body ground?

Yes → Check magnet clutch coil.
OK → Replace magnet clutch. Refer to HA-77.

No ↓

B

CHECK POWER SUPPLY FOR THERMAL PROTECTOR.
Disconnect thermal protector harness connector.
Do approx. 12V exist between thermal protector harness terminal ① and body ground?

Yes → **C** CHECK THERMAL PROTECTOR.
Check circuit continuity between thermal protector harness terminal ① and compressor harness terminal ①.
Continuity should exist.
If OK, check harness for short.
NG → Replace thermal protector.

No ↓

Disconnect A/C relay.

↓

D Note

CHECK CIRCUIT CONTINUITY BETWEEN A/C RELAY HARNESS TERMINAL ⑤ AND THERMAL PROTECTOR HARNESS TERMINAL ①.
Continuity should exist.
If OK, check harness for short.

OK ↓

E

CHECK POWER SUPPLY FOR A/C RELAY.
Disconnect A/C relay.
Do approx. 12 volts exist between A/C relay harness terminals ①, ③ and body ground?

No → CHECK POWER SUPPLY CIRCUIT AND 7.5A (No. 6 and 30) FUSES AT FUSE BLOCK.
Refer to EL section ("Wiring Diagram", "POWER SUPPLY ROUTING").

Yes ↓

CHECK A/C RELAY AFTER DISCONNECTING IT.
Refer to HA-64.

NG → Replace A/C relay.

OK ↓

Ⓐ
(Go to next page.)

Note:
If the result is NG or No after checking circuit continuity, repair harness or connector.

HA

Diagnostic Procedure 3 (Cont'd)

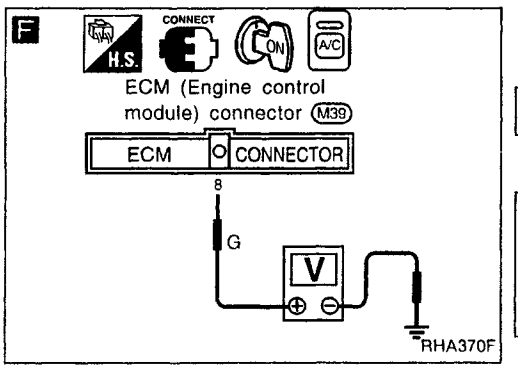

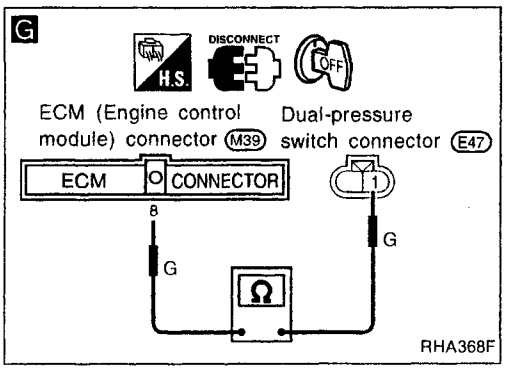

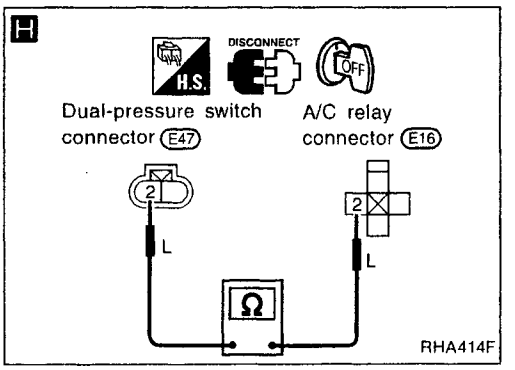

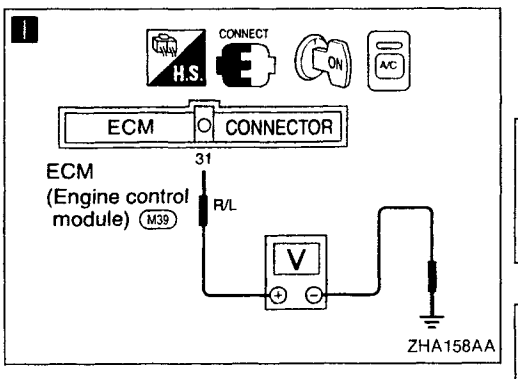

Ⓐ

Reconnect A/C relay.

F

CHECK COIL SIDE CIRCUIT OF A/C RELAY.
Do approx. 12 volts exist between ECM (Engine control module) harness terminal ⑧ and body ground?

No → Disconnect ECM (Engine control module) harness connector.
Disconnect dual-pressure switch harness connector.

G — Note

CHECK CIRCUIT CONTINUITY BETWEEN ECM (ENGINE CONTROL MODULE) HARNESS TERMINAL ⑧ AND DUAL-PRESSURE SWITCH HARNESS TERMINAL ①.
Continuity should exist.
If OK, check harness for short.

OK → CHECK DUAL-PRESSURE SWITCH. Refer to HA-64.

NG → Replace dual-pressure switch.

H — Note

CHECK CIRCUIT CONTINUITY BETWEEN A/C RELAY HARNESS TERMINAL ② AND DUAL-PRESSURE SWITCH HARNESS TERMINAL ②.
Continuity should exist.
If OK, check harness for short.

Yes

I

CHECK VOLTAGE FOR ECM (Engine control unit).
Do approx. 12 volts exist between ECM (Engine control module) harness terminal No. ㉛ and body ground?

No → CHECK ECM (Engine control module). (Refer to EC section.)

Yes → Disconnect ECM (Engine control module) harness connector.
Disconnect thermo control amp. harness connector.

Ⓑ

(Go to next page.)

Note:
If the result is NG or No after checking circuit continuity, repair harness or connector.

Diagnostic Procedure 3 (Cont'd)

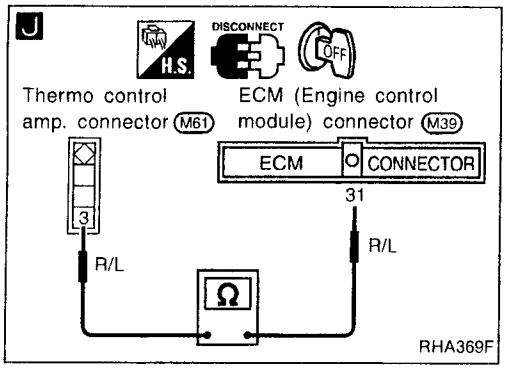

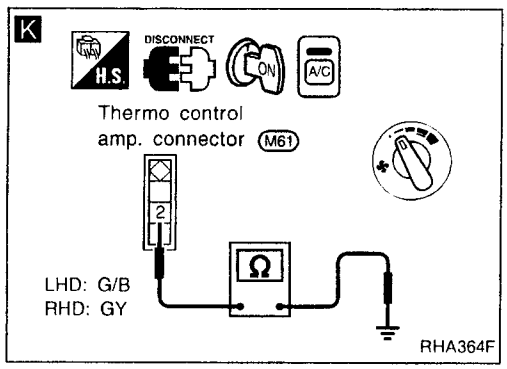

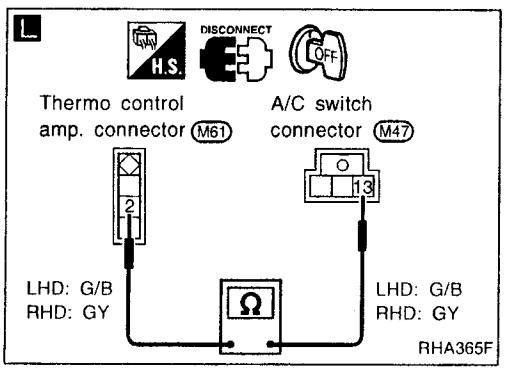

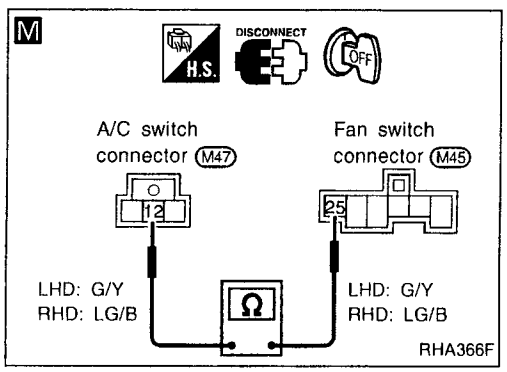

Ⓑ

J — Note

CHECK CIRCUIT CONTINUITY BETWEEN ECM (ENGINE CONTROL MODULE) HARNESS TERMINAL ㉛ AND THERMO CONTROL AMP. HARNESS TERMINAL ③.
Continuity should exist.
If OK, check harness for short.

↓OK

Reconnect thermo control amp. harness connector.

Note

CHECK POWER SUPPLY FOR THERMO CONTROL AMP.
Refer to HA-49.

K

CHECK BODY GROUND CIRCUIT FOR THERMO CONTROL AMP.
Disconnect thermo control amp. harness connector.
Does continuity exist between thermo control amp. harness terminal ② and body ground?

Yes → Replace thermo control amp.

↓No

Disconnect A/C switch harness connector.

L — Note

CHECK CIRCUIT CONTINUITY BETWEEN THERMO CONTROL AMP. HARNESS TERMINAL ② AND A/C SWITCH HARNESS TERMINAL ⑬.
Continuity should exist.
If OK, check harness for short.

↓OK

CHECK A/C SWITCH.
Refer to HA-63.

NG → Replace A/C switch.

↓OK

Disconnect fan switch harness connector.

M — Note

CHECK CIRCUIT CONTINUITY BETWEEN A/C SWITCH HARNESS TERMINAL ⑫ AND FAN SWITCH HARNESS TERMINAL ㉕.
Continuity should exist.
If OK, check harness for short.

↓OK

Ⓒ

(Go to next page.)

Note:
If the result is NG or No after checking circuit continuity, repair harness or connector.

HA

Diagnostic Procedure 3 (Cont'd)

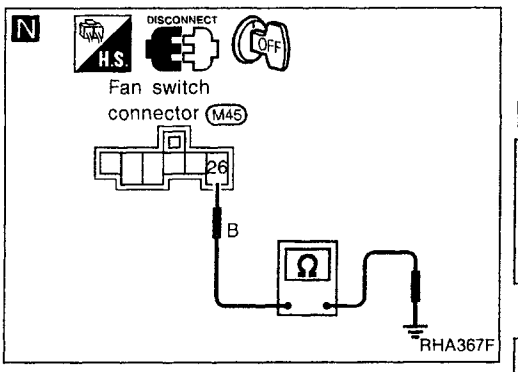

Ⓒ

N — Note

CHECK BODY GROUND CIRCUIT FOR FAN SWITCH.
Does continuity exist between fan switch harness terminal ㉖ and body ground?

Yes ↓

CHECK FAN SWITCH.
Refer to HA-62.

NG → Replace fan switch.

Note:
If the result is NG or No after checking circuit continuity, repair harness or connector.

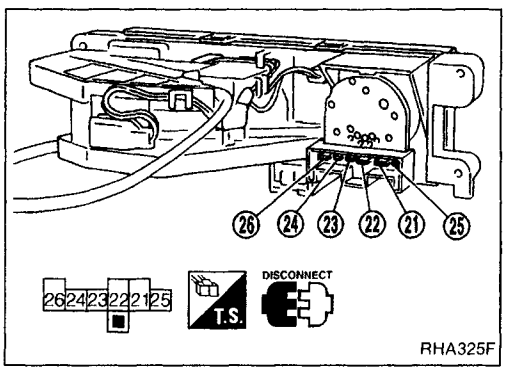

Electrical Components Inspection

FAN SWITCH

Check continuity between terminals at each switch position.

LEVER POSITION	Continuity between terminals
OFF	
1	㉔ — ㉖ — ㉕
2	㉓ — ㉖ — ㉕
3	㉒ — ㉖ — ㉕
4	㉑ — ㉖ — ㉕

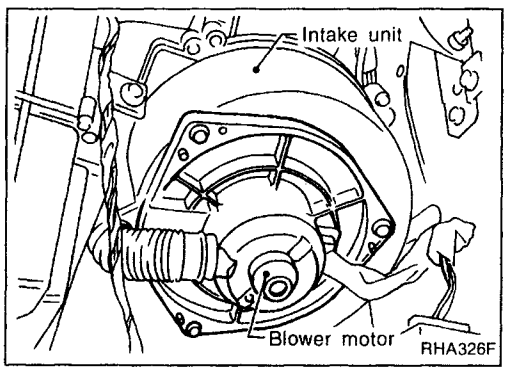

BLOWER MOTOR

Confirm smooth rotation of the blower motor.

- Ensure that there are no foreign particles inside the intake unit.

Electrical Components Inspection (Cont'd)

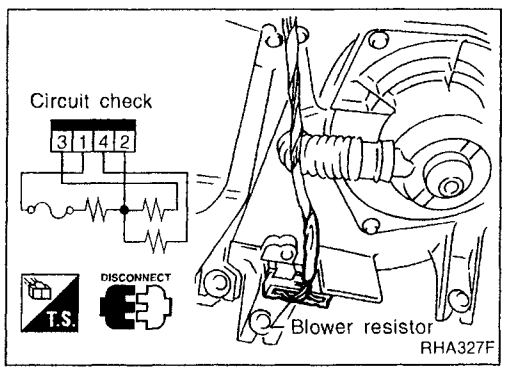

BLOWER RESISTOR

Check resistance between terminals.

Terminal No.		Resistance
⊕	⊖	
③	①	Approx. 1.4 - 1.6Ω
④		Approx. 2.5 - 2.8Ω
②		Approx. 0.5 - 0.6Ω

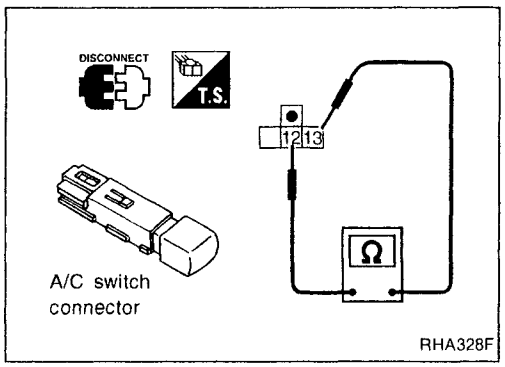

A/C SWITCH

Check continuity between terminals at each switch position.

Switch condition	Terminal No.		Continuity
A/C	⊕	⊖	
ON	⑬	⑫	Yes
OFF			No

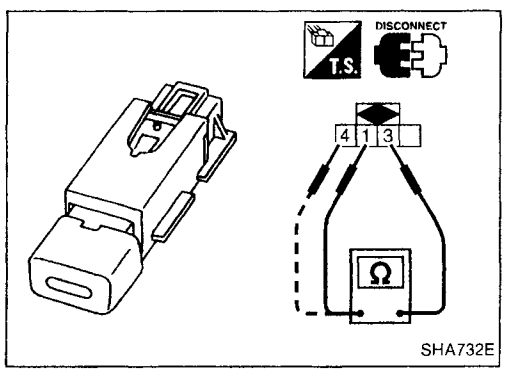

RECIRCULATION SWITCH

Check continuity between terminals at each switch position.

Terminal No.		Recirculation switch condition	Continuity
⊕	⊖		
①	③	ON	Yes
		OFF	No
④	③	ON	No
		OFF	Yes

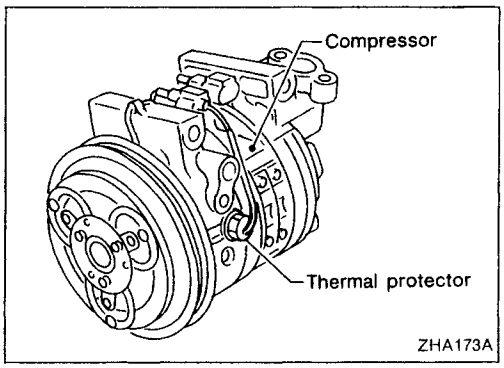

THERMAL PROTECTOR

Temperature of compressor °C (°F)	Compressor operation
Increasing to approx. 145 - 155 (293 - 311)	Turn OFF
Decreasing to approx. 130 - 140 (266 - 284)	Turn ON

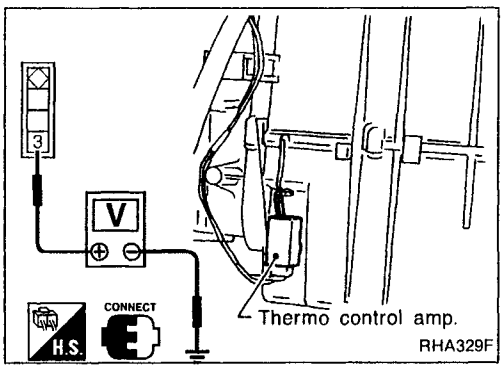

THERMO CONTROL AMP.

1. Run engine, and operate A/C system.
2. Connect the voltmeter from harness side.
3. Check thermo control amp. operation shown in the table.

Evaporator outlet air temperature °C (°F)	Thermo amp. operation	Tester
Decreasing to 2.5 - 3.5 (37 - 38)	Turn OFF	Approx. 12V
Increasing to 4.0 - 5.0 (39 - 41)	Turn On	Approx. 0V

Electrical Components Inspection (Cont'd)

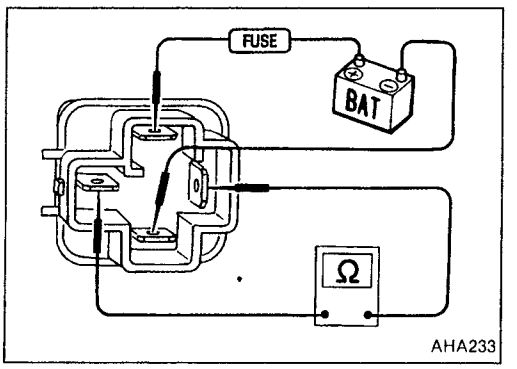

A/C RELAY

Check continuity between terminals ③ and ⑤.

Conditions	Continuity
12V direct current supply between terminals ① and ②	Yes
No current supply	No

If NG, replace relay.

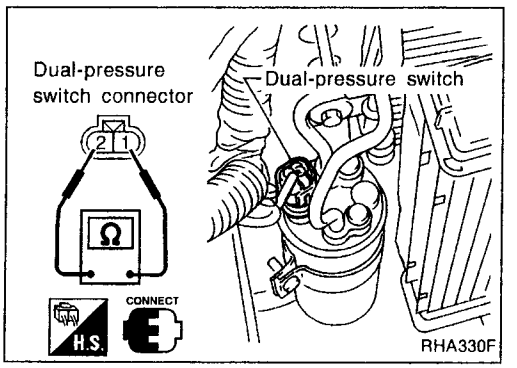

DUAL-PRESSURE SWITCH

	ON kPa (bar, kg/cm^2, psi)	OFF kPa (bar, kg/cm^2, psi)
Low-pressure side	Increasing to 157 - 216 (1.57 - 2.16, 1.6 - 2.2, 23 - 31)	Decreasing to 157 - 196 (1.57 - 1.96, 1.6 - 2.0, 23 - 28)
High-pressure side	Decreasing to 1,863 - 2,256 (18.6 - 22.6, 19 - 23, 270 - 327)	Increasing to 2,452 - 2,844 (24.5 - 28.4, 25 - 29, 356 - 412)

Control Linkage Adjustment

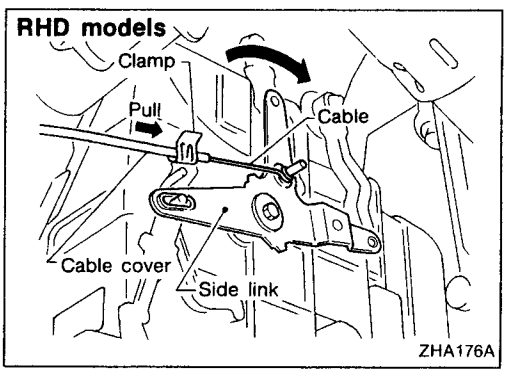

MODE CONTROL CABLE

1. For RHD models, turn the mode control knob to the VENT position.
   For LHD models, turn the mode control knob to the DEF position.
2. For RHD models, set the side link in the VENT position by hand.
   For LHD models, set the side link in the DEF position by hand.
3. Pull on the cable cover in the direction of the arrow, then clamp it.

After positioning control cable, check that it operates properly.

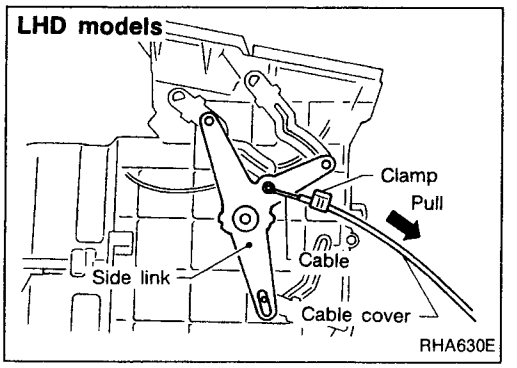

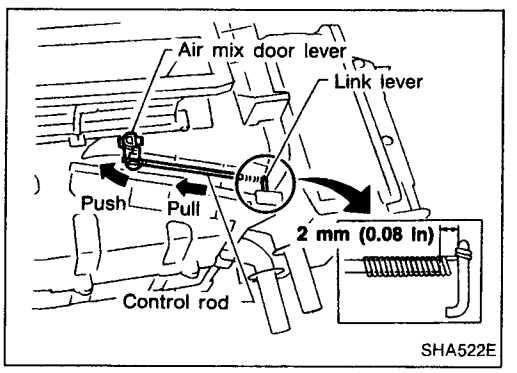

WATER COCK CONTROL ROD

- **When adjusting water cock control rod, first disconnect temperature control cable from air mix door lever and then adjust control rod. Reconnect temperature control cable and readjust it. (Refer to TEMPERATURE CONTROL CABLE.)**

1. Push air mix door lever in direction of arrow.
2. Pull control rod of water cock in direction of arrow so as to make clearance of about 2 mm (0.08 in) between ends of rod and link lever and connect the rod to door lever.

After connecting control rod, check it operates properly.

Control Linkage Adjustment (Cont'd)

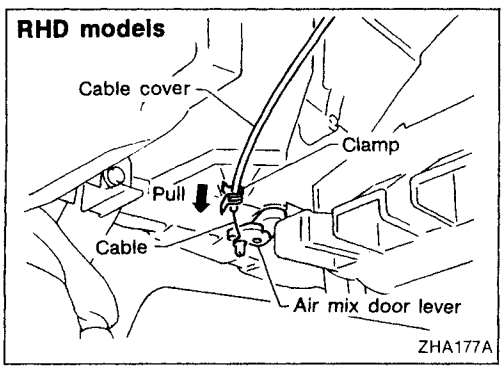

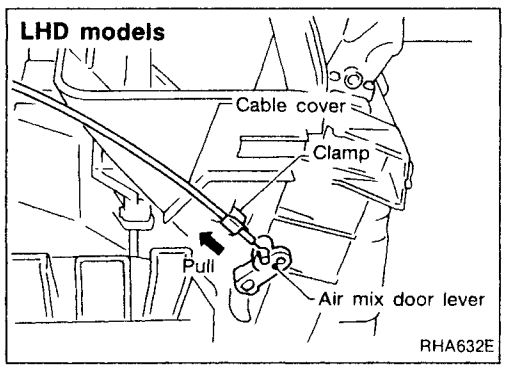

TEMPERATURE CONTROL CABLE

1. For RHD models, move the temperature control knob to the full cold position.
   For LHD models, move the temperature control knob to the full hot position.
2. For RHD models, set the air mix door lever in the full cold position.
   For LHD models, set the air mix door lever in the full hot position.
3. Pull on the cable cover in the direction of the arrow, then clamp it.

After positioning control cable, check that it operates properly.

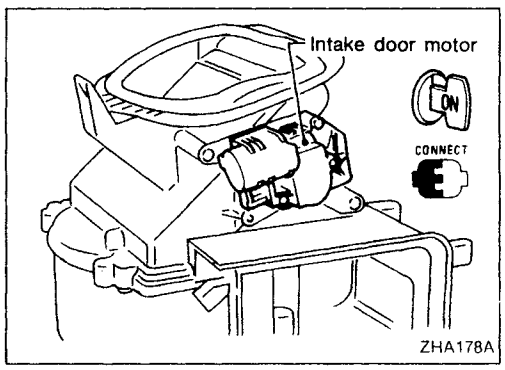

INTAKE DOOR MOTOR

1. Install intake door motor on intake unit.
   Ensure that the intake door motor lever is fitted into the slit portion of intake door link.
2. Connect the intake door motor harness connector.
3. Turn ignition switch to ON.
4. Check that intake door operates properly when REC switch is turned ON and OFF.

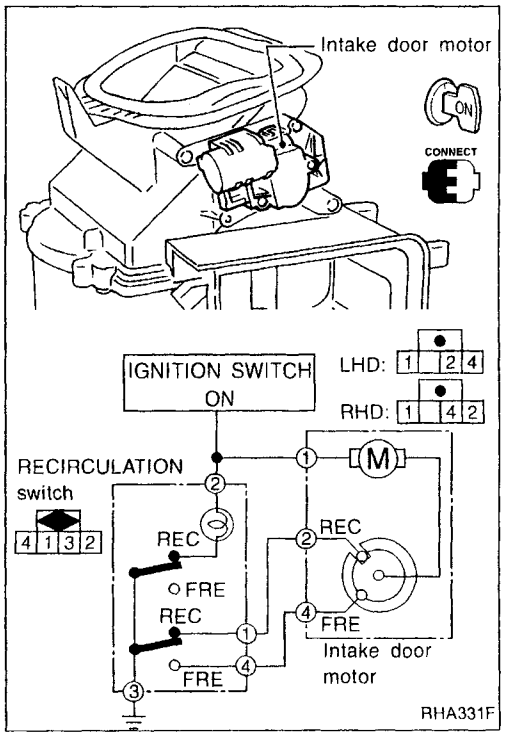

System Description

INTAKE DOOR MOTOR

The intake door motor is installed on the intake unit. Using a link it opens and closes the intake door.
When RECIRCULATION switch is ON, the ground line of the motor is switched from terminal ④ to ②. This starts the motor because the position switch contacts built into it make current flow. When RECIRCULATION switch is OFF, the ground line is switched from terminal ② to ④. The contacts turn along with the motor. When they reach the non-current flow position, the motor will stop. The motor always turns in the same direction.

HA

HFC-134a (R-134a) Service Procedure

SETTING OF SERVICE TOOLS AND EQUIPMENT

DISCHARGING REFRIGERANT

WARNING:

Avoid breathing A/C refrigerant and lubricant vapor or mist. Exposure may irritate eyes, nose and throat. Remove HFC-134a (R-134a) from A/C system using certified service equipment meeting requirements of HFC-134a (R-134a) recycling equipment or HFC-134a (R-134a) recovery equipment. If accidental system discharge occurs, ventilate work area before resuming service. Additional health and safety information may be obtained from refrigerant and lubricant manufacturers.

Example

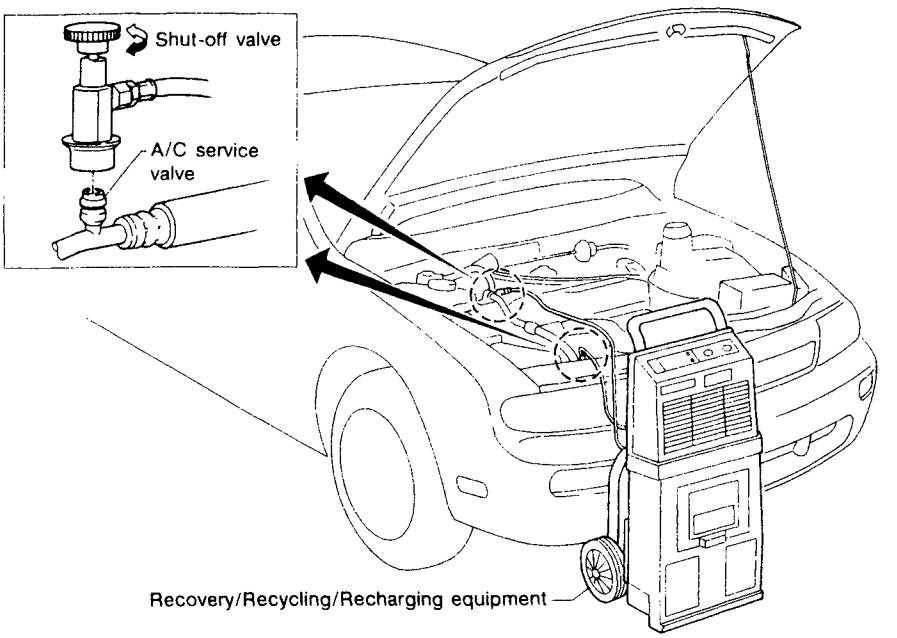

SHA539DC

EVACUATING SYSTEM AND CHARGING REFRIGERANT

Example

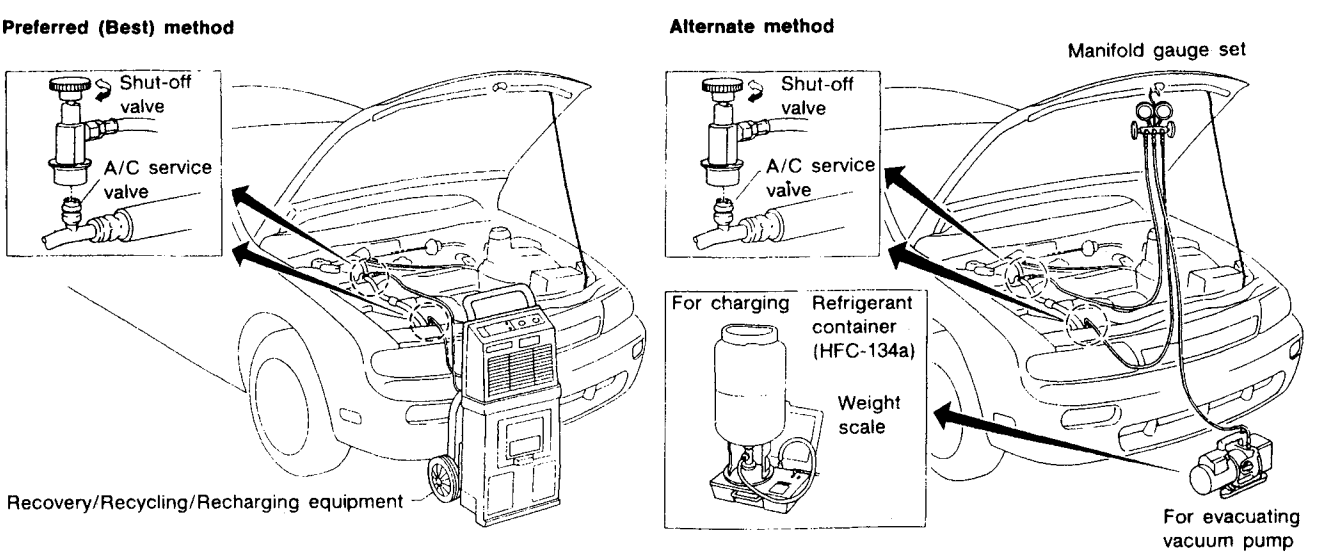

SHA540DC

HFC-134a (R-134a) Service Procedure (Cont'd)

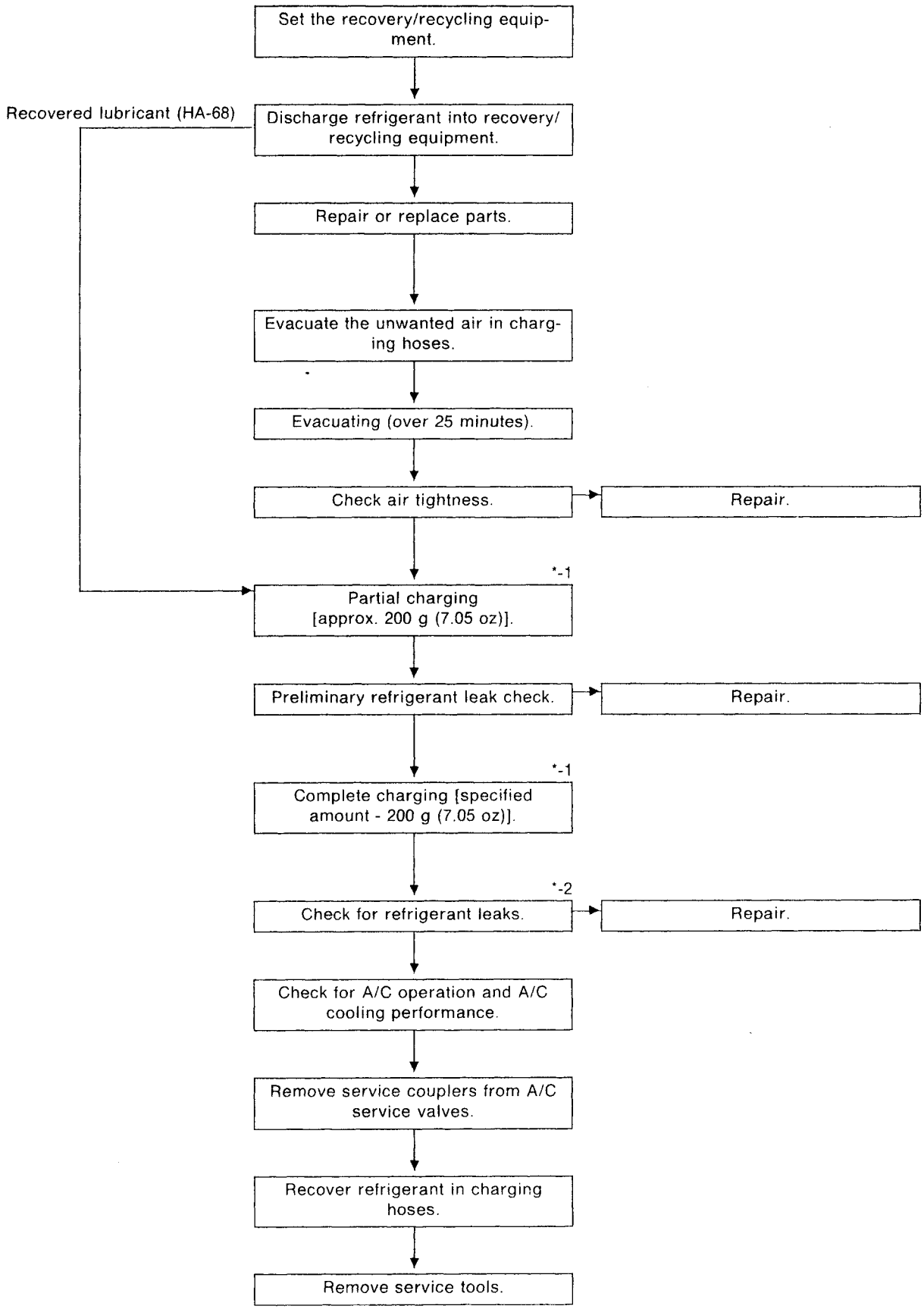

Note: *-1 Before charging refrigerant, ensure engine is off.
*-2 Before checking for leaks, start engine to activate air conditioning system then turn it off. Service valve caps must be attached to valves (to prevent leakage).

Maintenance of Lubricant Quantity in Compressor

The lubricant in the compressor circulates through the system with the refrigerant. Add lubricant to compressor when replacing any component or after a large gas leakage occurred. It is important to maintain the specified amount.

If lubricant quantity is not maintained properly, the following malfunctions may result:

- Lack of lubricant: May lead to a seized compressor
- Excessive lubricant: Inadequate cooling (thermal exchange interference)

LUBRICANT

Name: Nissan A/C System Oil Type R
Part number: KLH00-PAGR0

CHECKING AND ADJUSTING

Adjust the lubricant quantity according to the flowchart shown below.

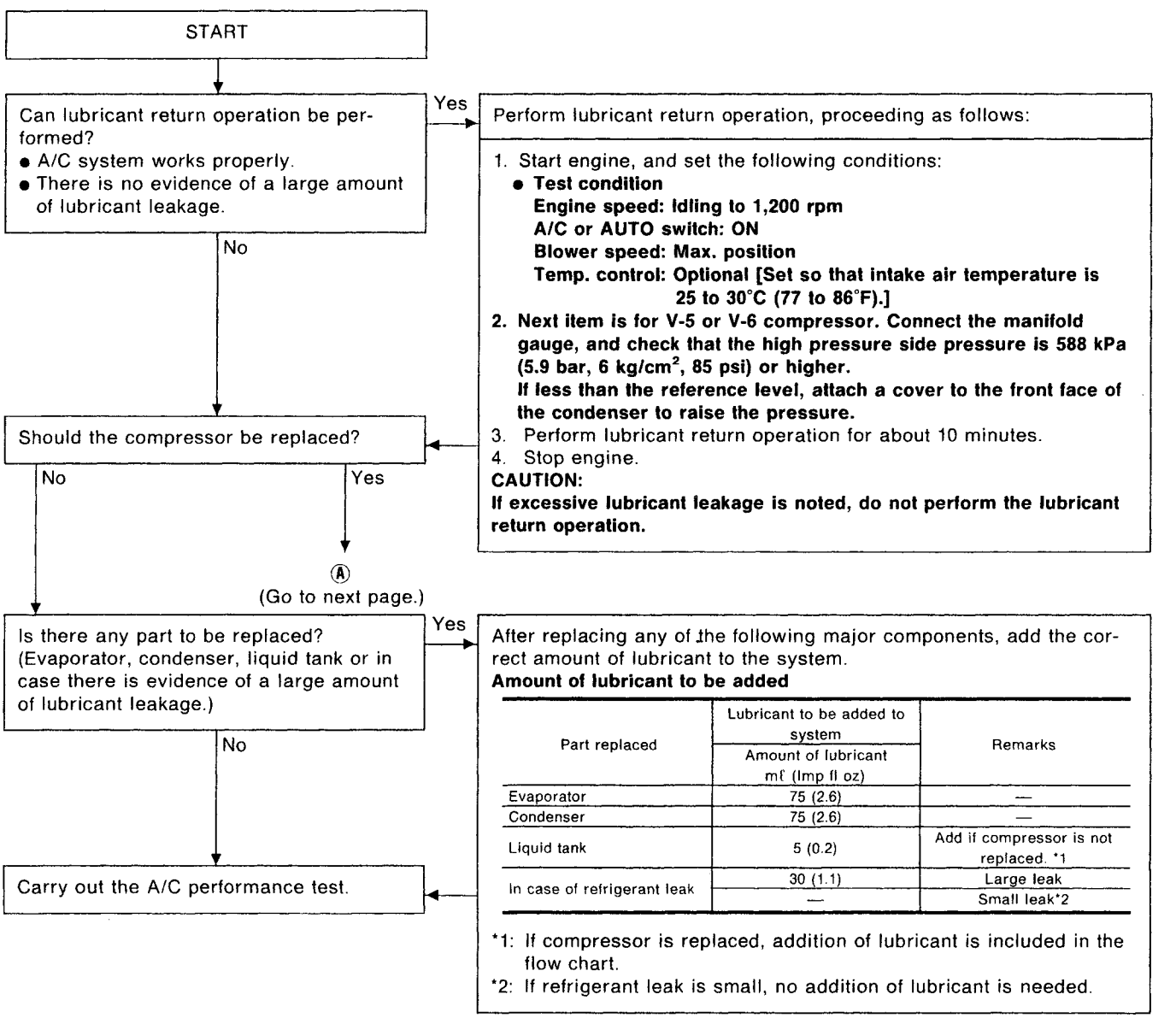

Maintenance of Lubricant Quantity in Compressor (Cont'd)

Ⓐ

1. Discharge refrigerant into the refrigerant recovery/recycling equipment. Measure lubricant discharged into the recovery/ recycling equipment.
2. Remove the drain plug of the "old" (removed) compressor (applicable only to V-5, V-6 or DKS-16H compressor). Drain the lubricant into a graduated container and record the amount of drained lubricant.
3. Remove the drain plug and drain the lubricant from the "new" compressor into a separate, clean container.
4. Measure an amount of new lubricant installed equal to amount drained from "old" compressor. Add this lubricant to "new" compressor through the suction port opening.
5. Measure an amount of new lubricant equal to the amount recovered during discharging. Add this lubricant to "new" compressor through the suction port opening.
6. Torque the drain plug.
   V-5 or V-6 compressor: 18 - 19 N·m (1.8 - 1.9 kg-m, 13 - 14 ft-lb)
   DKS-16H compressor: 14 - 16 N·m (1.4 - 1.6 kg-m, 10 - 12 ft-lb)
7. If the liquid tank also needs to be replaced, add an additional 5 mℓ (0.2 Imp fl oz) of lubricant at this time.
   Do not add this 5 mℓ (0.2 Imp fl oz) of lubricant if only replacing the compressor.

Lubricant adjusting procedure for compressor replacement

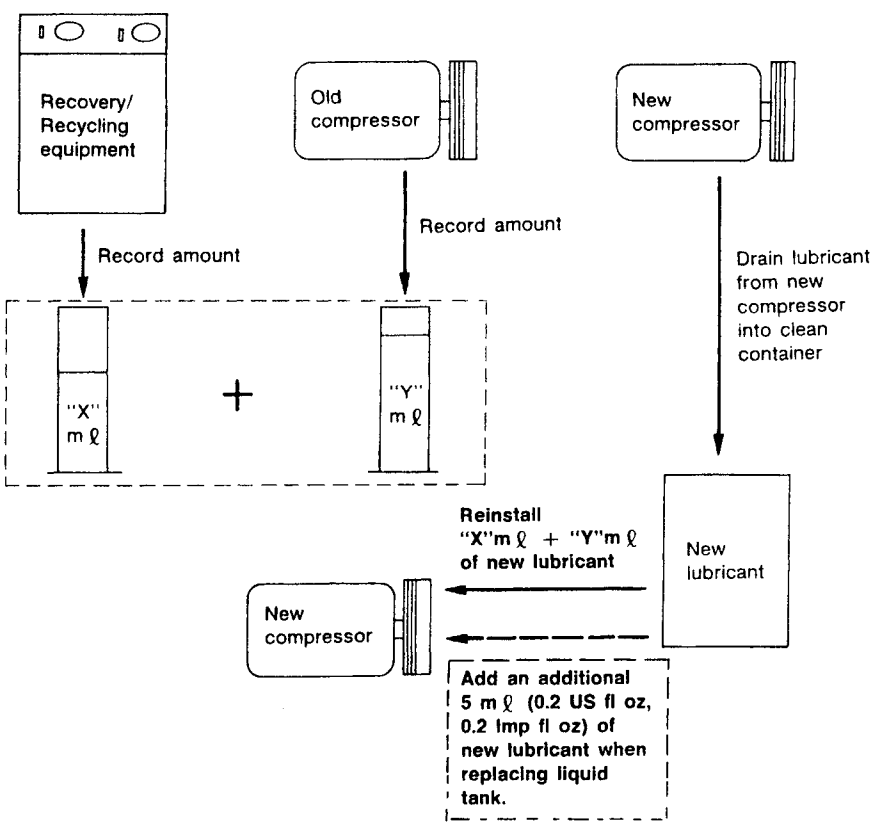

RHA065DD

HA

Refrigerant Lines

- Refer to page HA-4 regarding "Precautions for Refrigerant Connection".

GA ENGINE RHD MODEL

SEC. 271·274·276

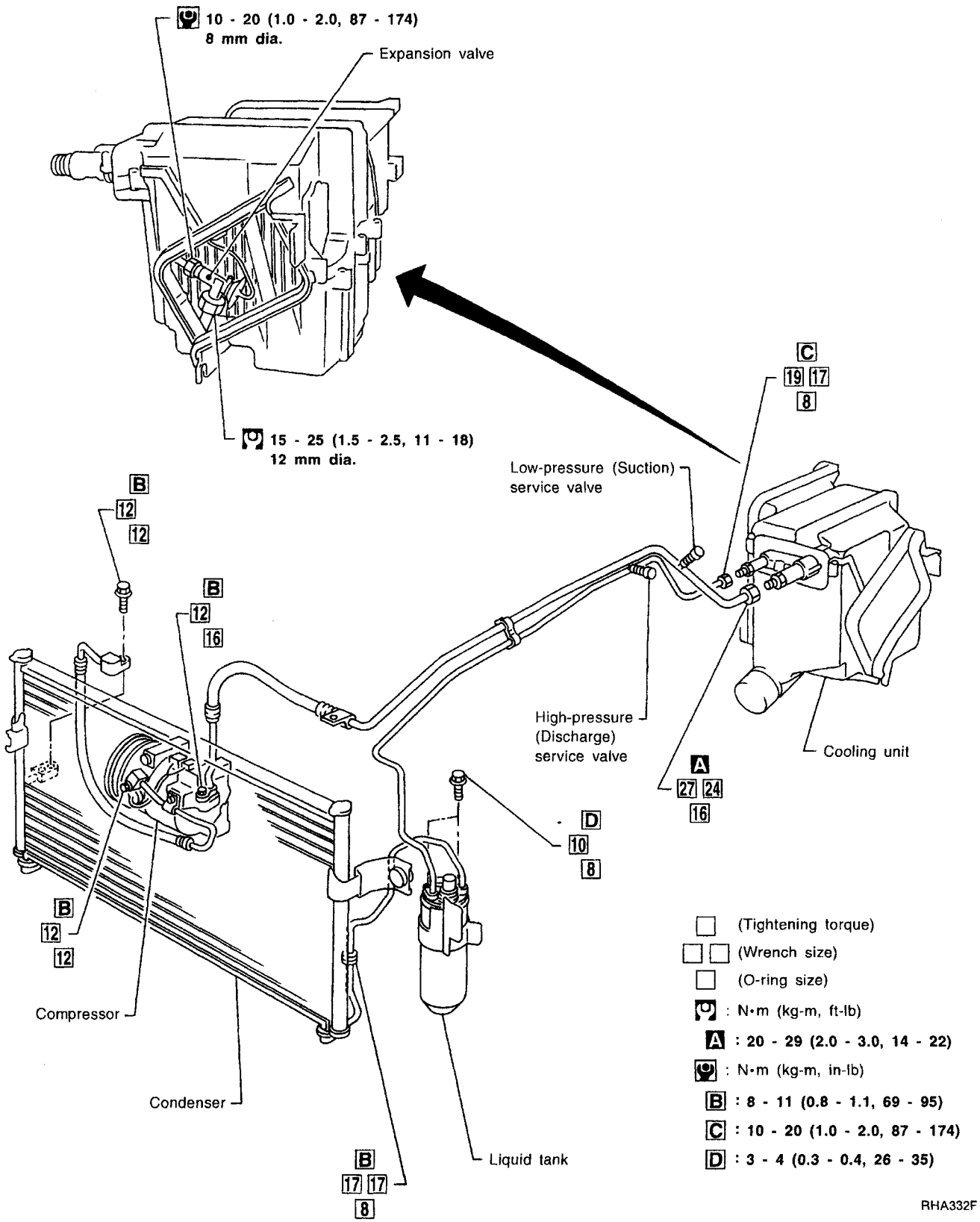

Refrigerant Lines (Cont'd)

SR ENGINE RHD MODEL

SEC. 271·274·276

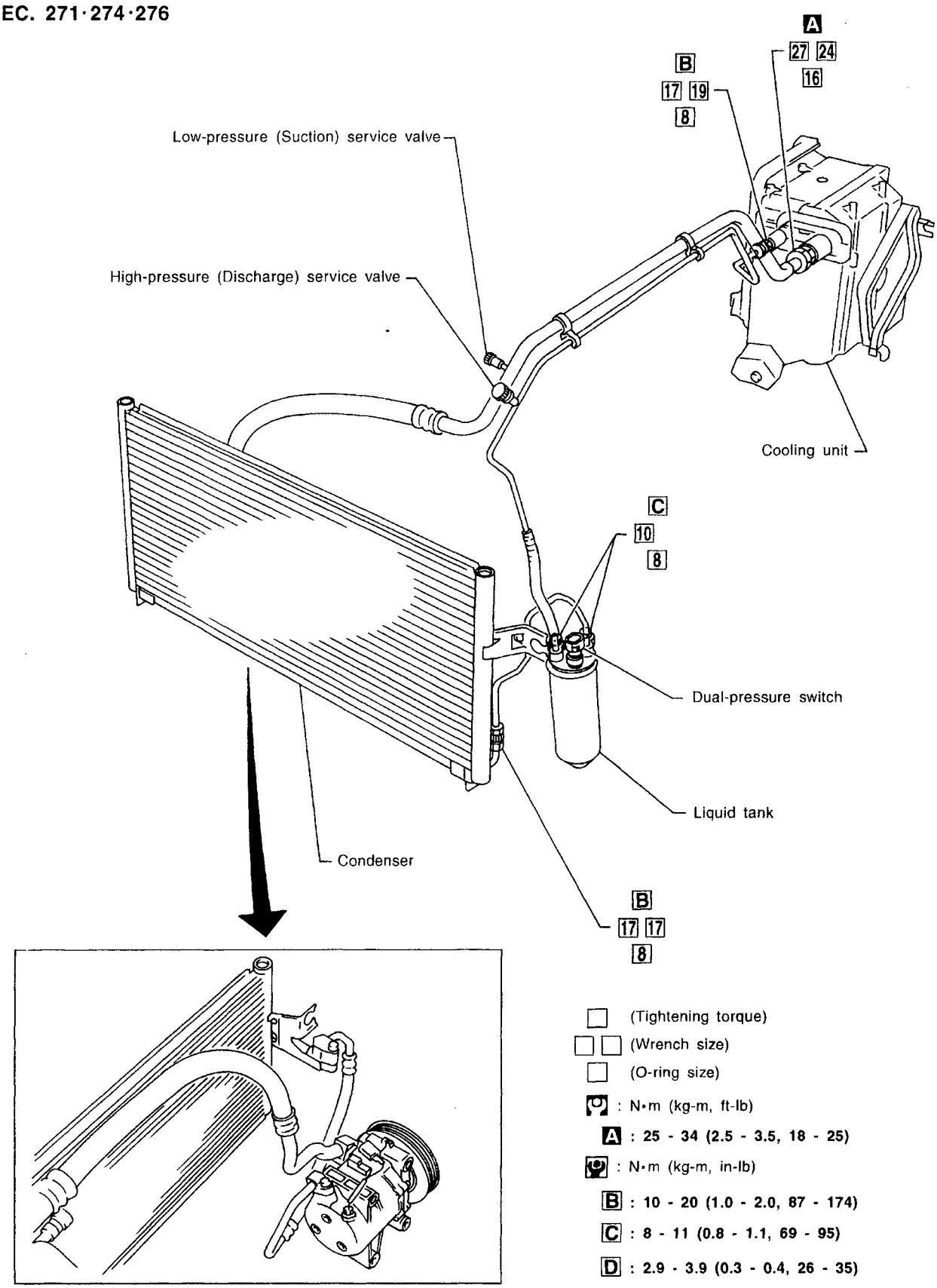

□ (Tightening torque)

□ □ (Wrench size)

□ (O-ring size)

: N•m (kg-m, ft-lb)

A : 25 - 34 (2.5 - 3.5, 18 - 25)

: N•m (kg-m, in-lb)

B : 10 - 20 (1.0 - 2.0, 87 - 174)

C : 8 - 11 (0.8 - 1.1, 69 - 95)

D : 2.9 - 3.9 (0.3 - 0.4, 26 - 35)

HA

RHA371F

Refrigerant Lines (Cont'd)

CD ENGINE RHD MODEL

SEC. 271·274·276

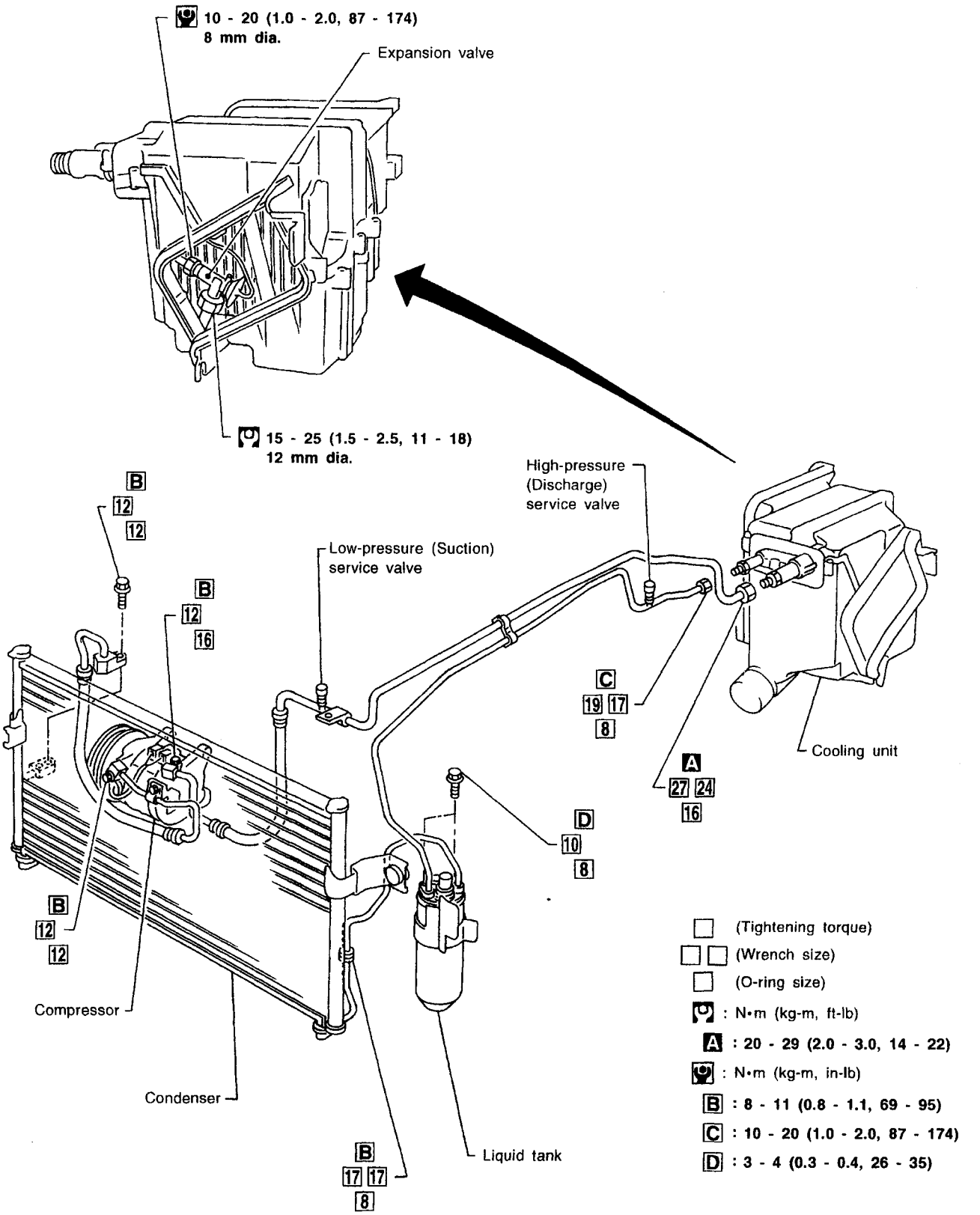

RHA333F

Refrigerant Lines (Cont'd)

GA ENGINE LHD MODEL

SEC. 271·274·276

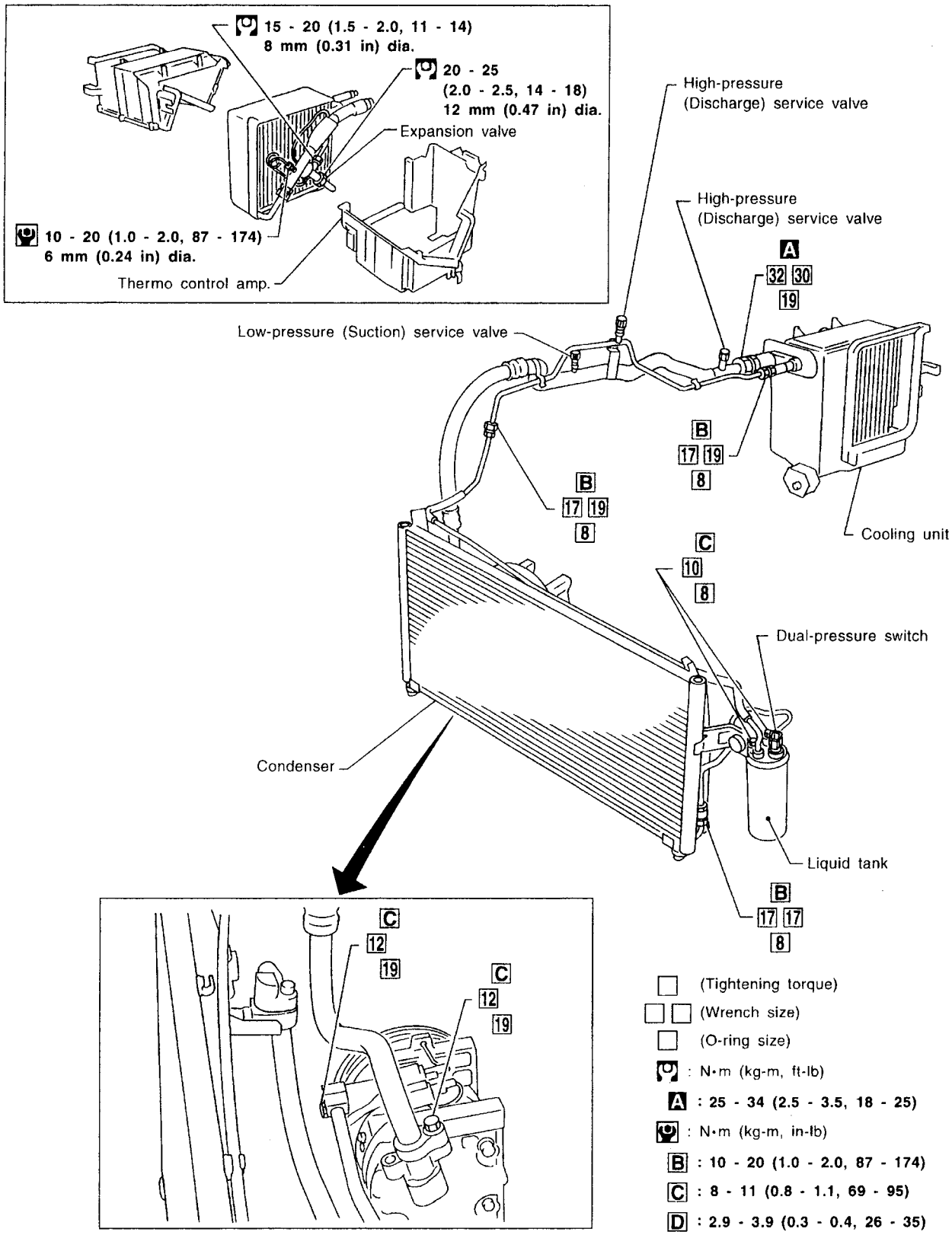

HA

RHA334F

Refrigerant Lines (Cont'd)

CD ENGINE LHD MODEL

SEC. 271·274·276

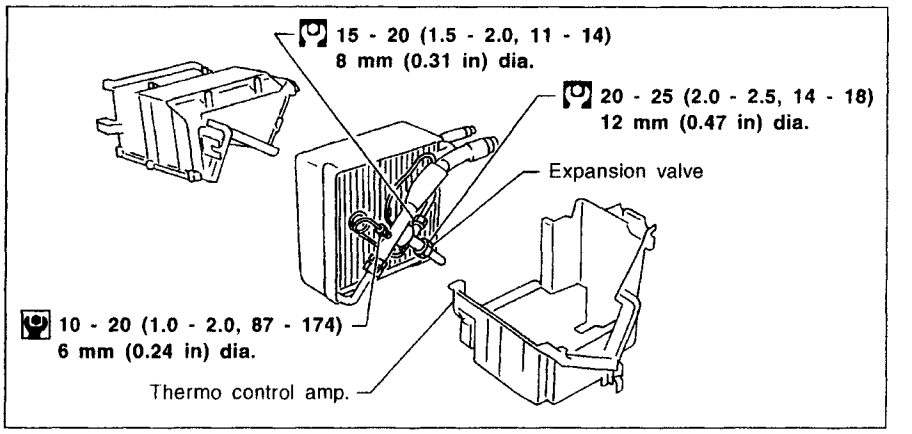

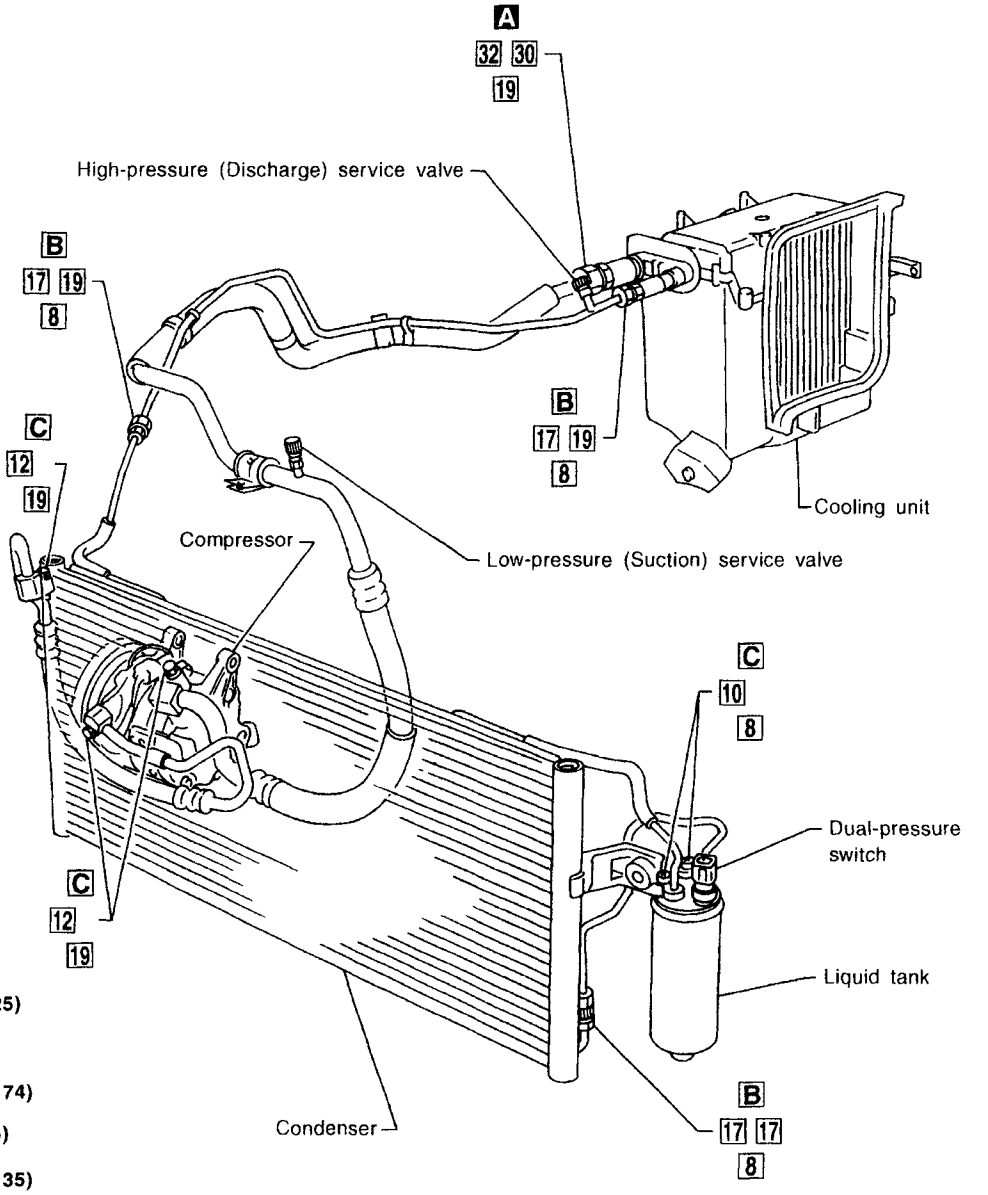

(Tightening torque)

(Wrench size)

(O-ring size)

: N•m (kg-m, ft-lb)

A : 25 - 34 (2.5 - 3.5, 18 - 25)

: N•m (kg-m, in-lb)

B : 10 - 20 (1.0 - 2.0, 87 - 174)

C : 8 - 11 (0.8 - 1.1, 69 - 95)

D : 2.9 - 3.9 (0.3 - 0.4, 26 - 35)

RHA335F

Compressor Mounting

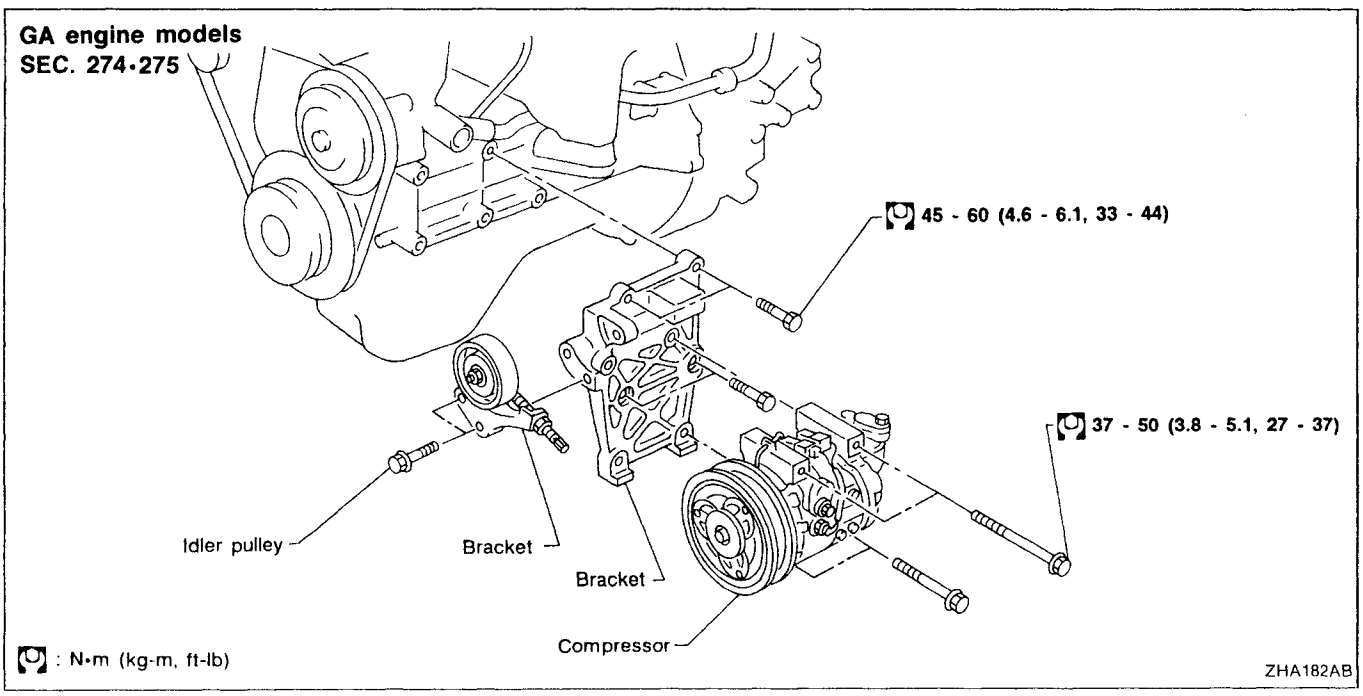

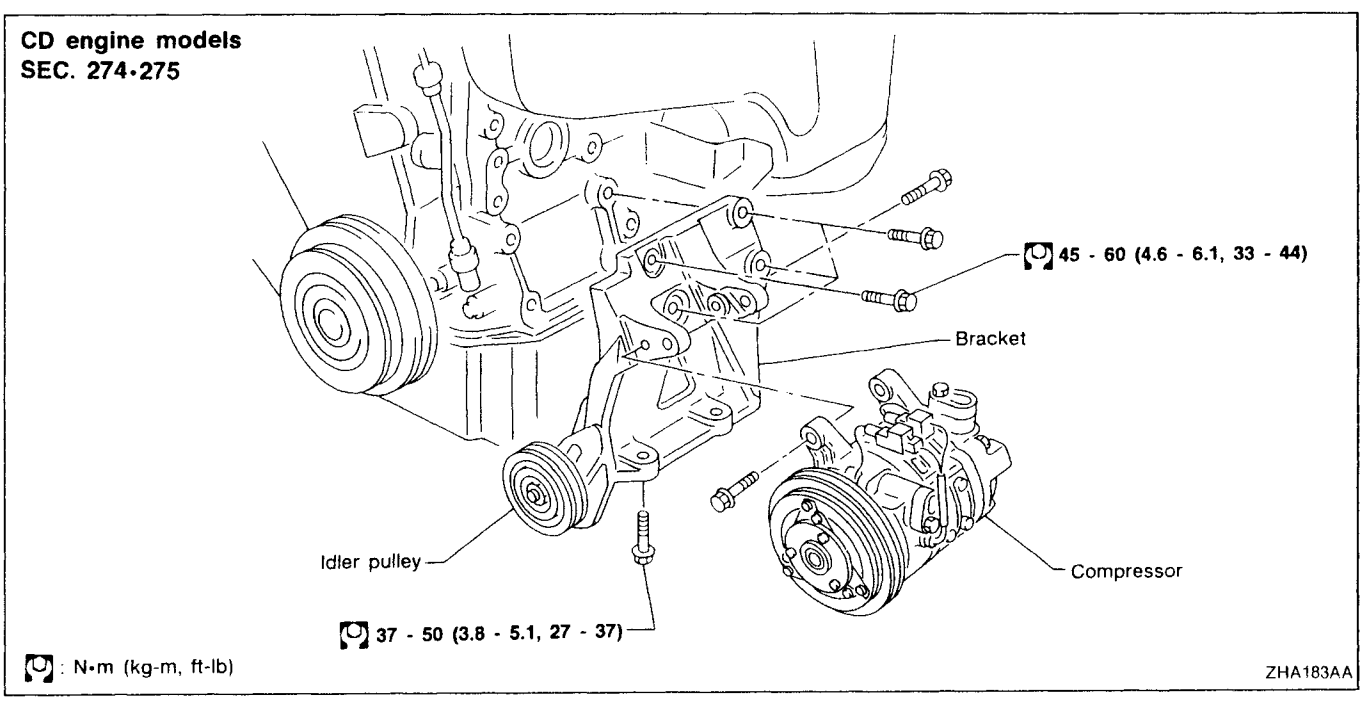

HA

Compressor Mounting (Cont'd)

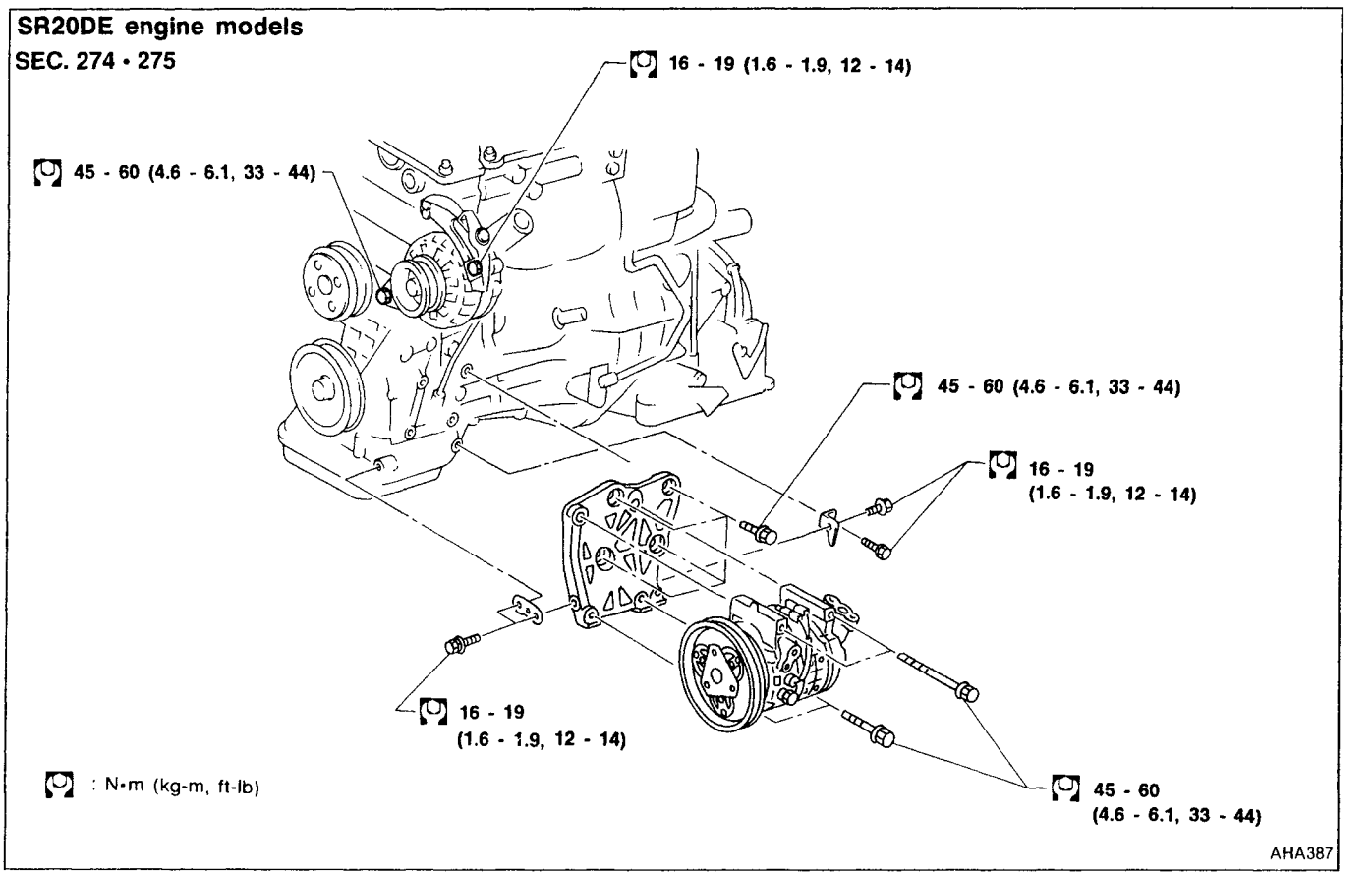

Belt Tension

- Refer to MA section.

Fast Idle Control Device (FICD)

- Refer to EC section.

Compressor — Model DKV-11D and DKV-14D (ZEXEL make)

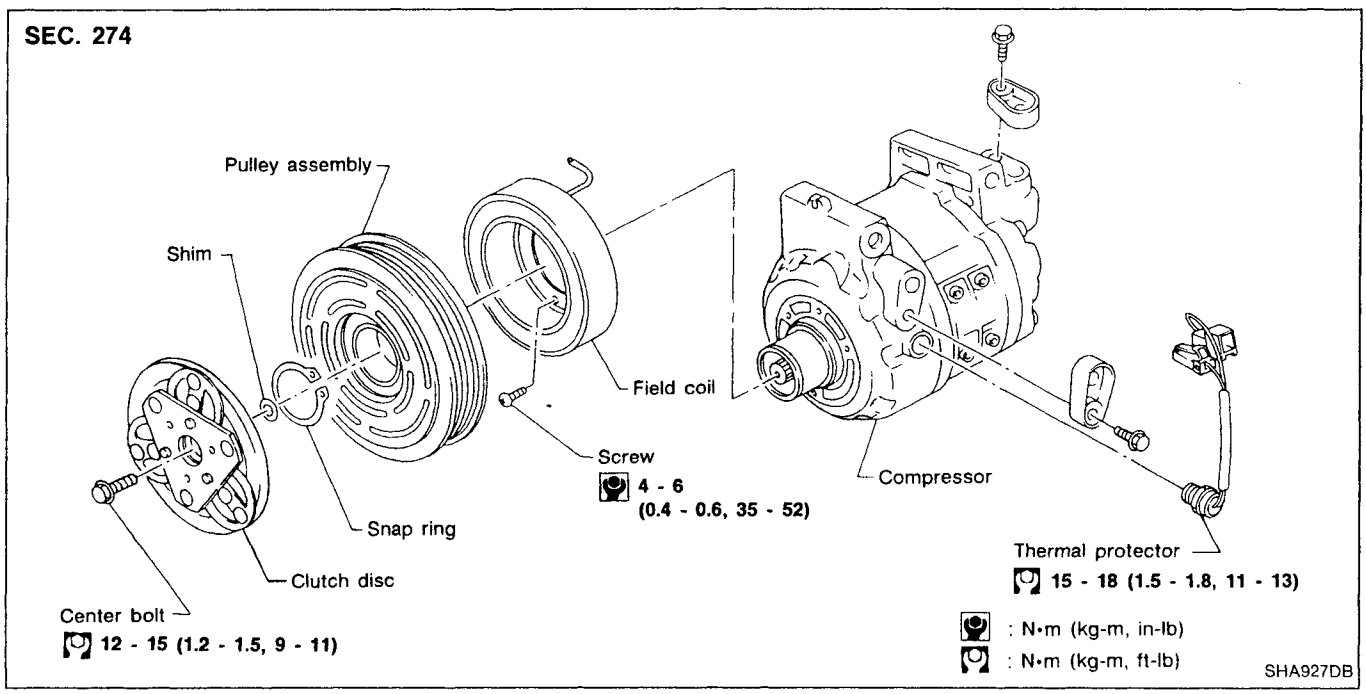

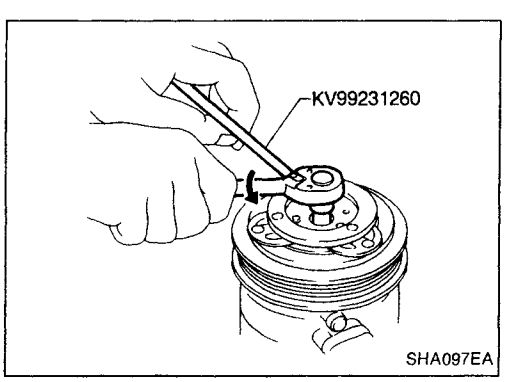

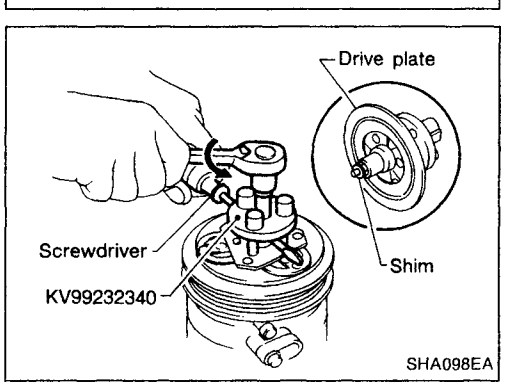

Compressor Clutch

REMOVAL

- When removing center bolt, hold clutch disc with clutch disc wrench.

- Remove the drive plate using Tool KV99232340.
  Insert holder's three pins into the drive plate. Rotate the holder clockwise to hook it onto the plate. Then, tighten the center bolt to remove the drive plate.
  When tightening the center bolt, insert a round bar (screwdriver, etc.) between two of the pins (as shown in the left-hand figure) to prevent drive plate rotation. After removing the drive plate, remove the shims from either the drive shaft or the drive plate.

HA

Compressor Clutch (Cont'd)

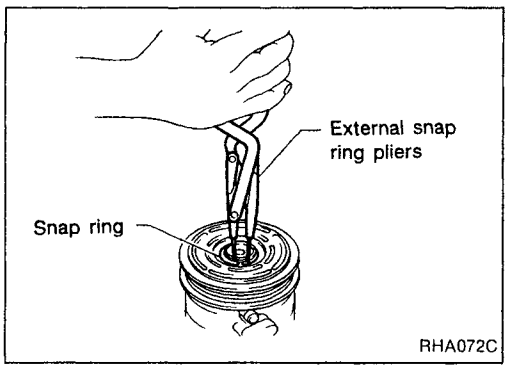

- Remove the snap ring using external snap ring pliers.

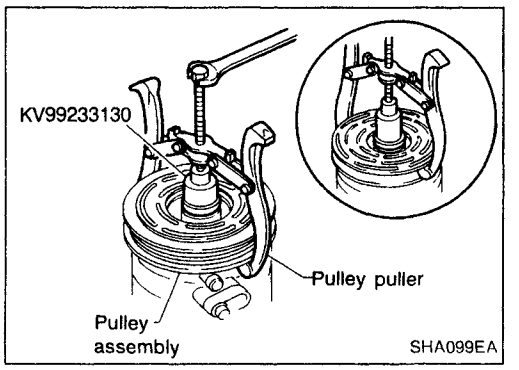

- Pulley removal
  Use any commercially available pulley puller. Position the center of it on the end of the drive shaft, and remove the pulley assembly.
  For pressed pulleys
  To prevent deformation of the pulley groove, the puller claws should be hooked into (not under) the pulley groove.
  For machine latched pulleys
  Align the pulley puller groove with the pulley groove, and then remove the pulley assembly.
- Remove the field coil harness clip using a screwdriver.

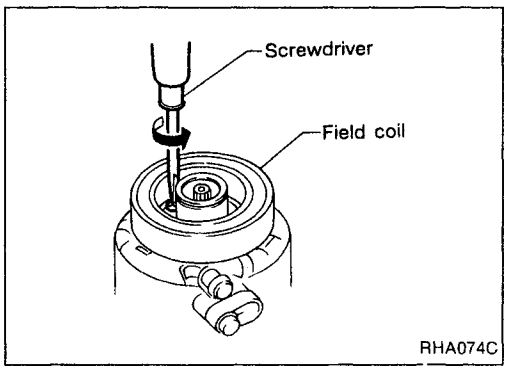

- Remove the three field coil fixing screws and remove the field coil.

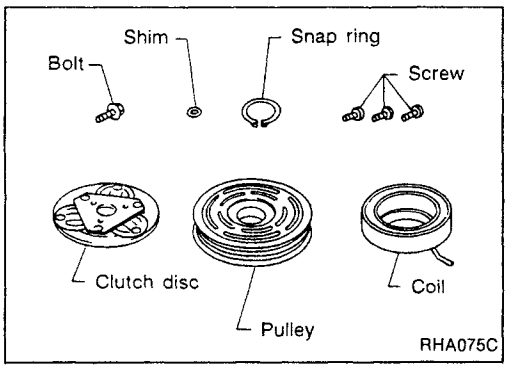

INSPECTION

Clutch disc: If the contact surface shows signs of damage due to excessive heat, replace clutch disc and pulley.
Pulley: Check the appearance of the pulley assembly. Check the contact surface of the pulley for any sign of excessive grooving due to slippage. If any sign is found, replace both the pulley and clutch disc. The contact surfaces of the pulley assembly should be cleaned with a suitable solvent before reinstallation.
Coil: Check coil for loose connection or cracked insulation.

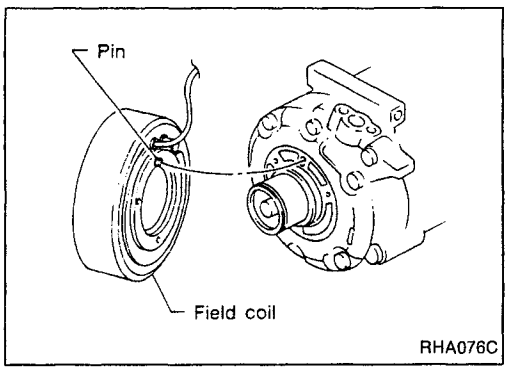

INSTALLATION

- Install the field coil.

Be sure to align the coil's pin with the hole in the compressor's front head.

- Install the field coil harness clip using a screwdriver.

Compressor Clutch (Cont'd)

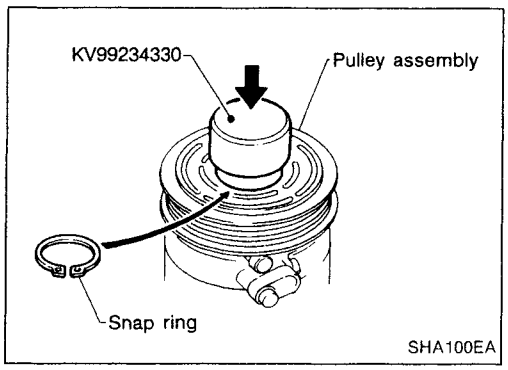

- Install the pulley assembly using the installer and a hand press, and then install the snap ring using snap ring pliers.

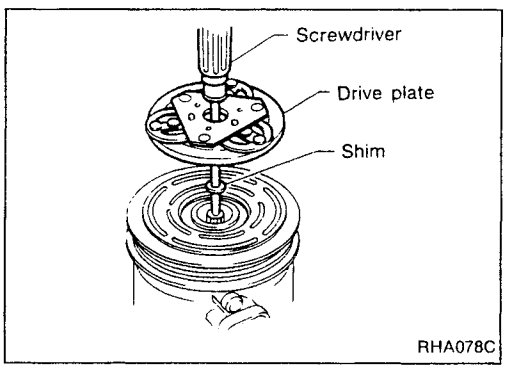

- Install the drive plate on the drive shaft, together with the original shim(s). Press the drive plate down by hand.

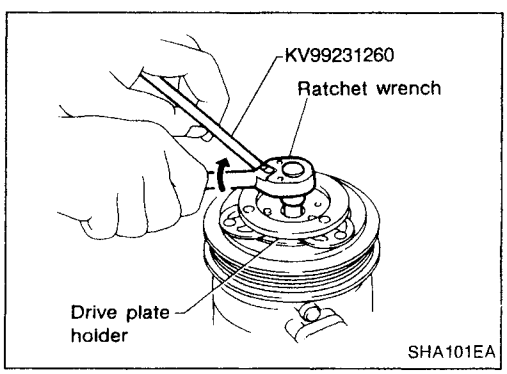

- Using the holder to prevent drive plate rotation, tighten the bolt to 12 to 15 N·m (1.2 to 1.5 kg-m, 9 to 11 ft-lb) torque.

After tightening the bolt, check that the pulley rotates smoothly.

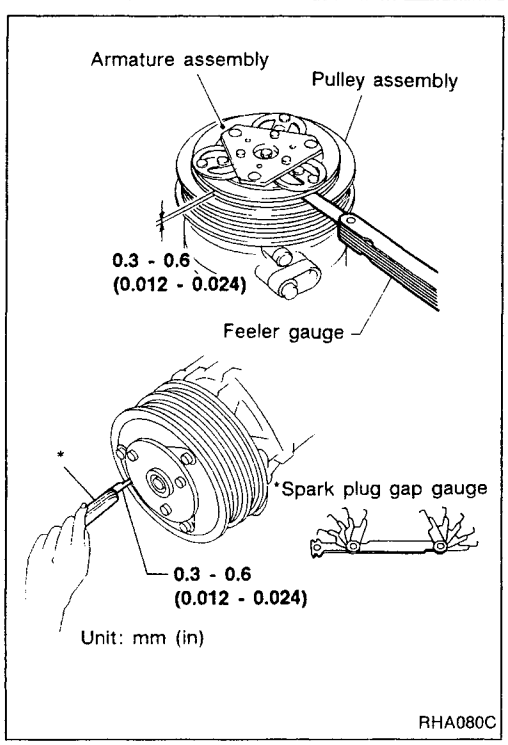

- Check clearance around the entire periphery of clutch disc.
  Disc-to-pulley clearance:
  0.3 - 0.6 mm (0.012 - 0.024 in)
  If the specified clearance is not obtained, replace adjusting spacer and readjust.

BREAK-IN OPERATION

When replacing compressor clutch assembly, always conduct the break-in operation. This is done by engaging and disengaging the clutch about thirty times. Break-in operation raises the level of transmitted torque.

HA

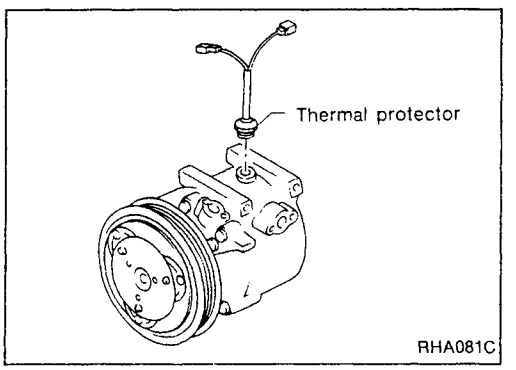

Thermal Protector

INSPECTION

- When servicing, do not allow foreign matter to get into compressor.
- Check continuity between two terminals.

Compressor — Model CR-14 (Calsonic make)

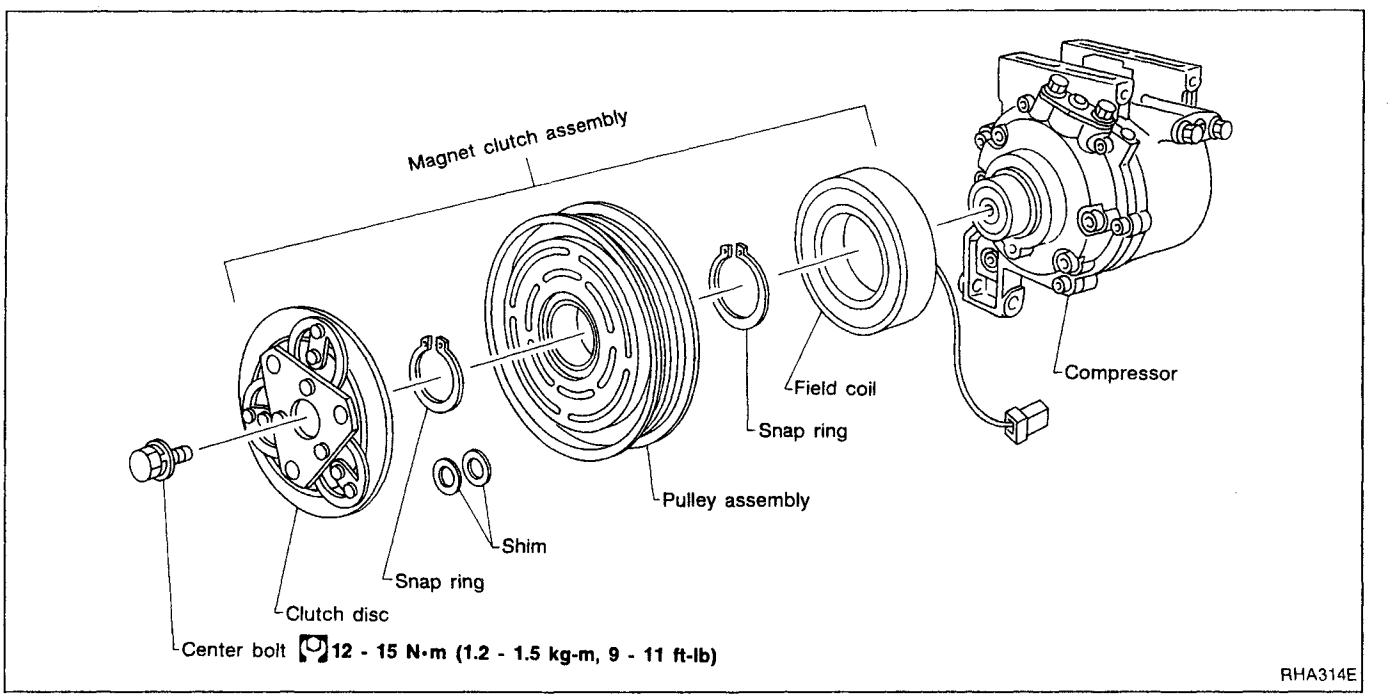

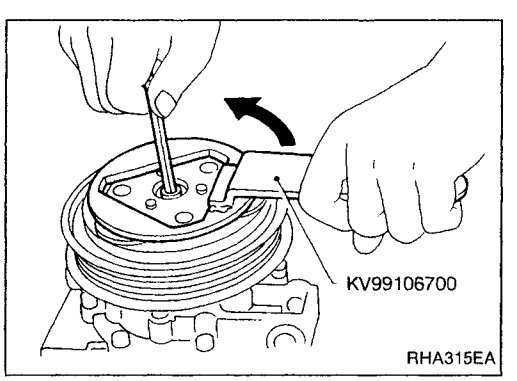

Compressor Clutch

REMOVAL

- When removing center bolt, hold clutch disc with clutch disc wrench.
- Take off clutch disc.

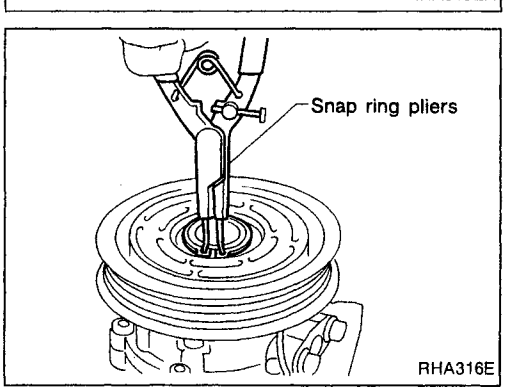

- Remove snap ring (which secures rotor pulley) by using external snap ring pliers.

Compressor Clutch (Cont'd)

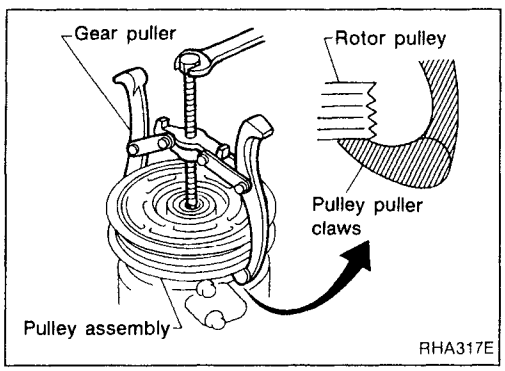

- Pulley removal
  Position the center pulley puller on the end of the drive shaft, and remove the pulley assembly using any commercially available pulley puller.
  To prevent the pulley groove from being deformed, the puller claws should be positioned onto the edge of the pulley assembly.

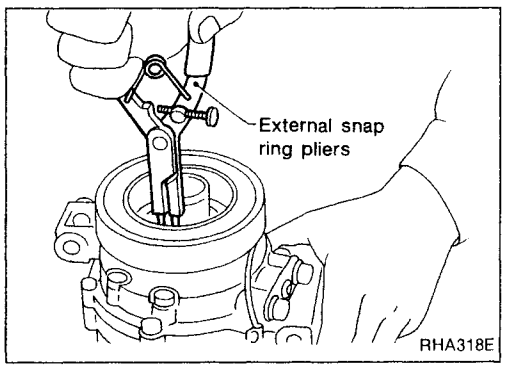

- Remove snap ring (which secures field coil) by using external snap ring pliers.

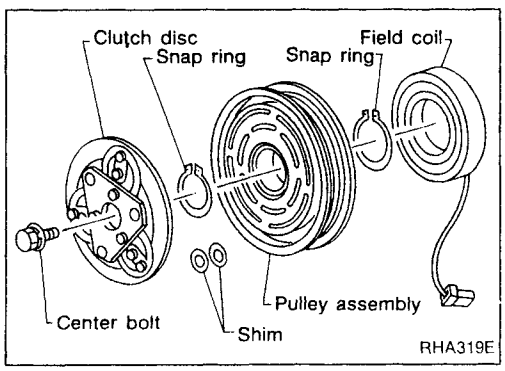

INSPECTION

Clutch disc

If the contact surface shows signs of damage due to excessive heat, the clutch disc and pulley should be replaced.

Pulley

Check the appearance of the pulley assembly. If the contact surface of the pulley shows signs of excessive grooving due to slippage, both the pulley and clutch disc should be replaced. The contact surfaces of the pulley assembly should be cleaned with a suitable solvent before reinstallation.

Coil

Check coil for loose connection or cracked insulation.

HA

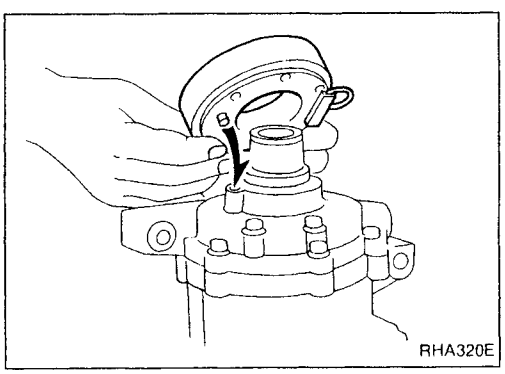

INSTALLATION

- Position the field coil.

Be sure to align the coil's pin with the hole in compressor's front head.

- Install snap ring (which secures field coil) by using external snap ring pliers.

Compressor Clutch (Cont'd)

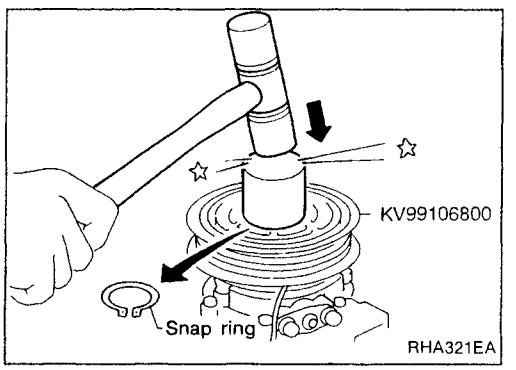

- Position and install pulley assembly securely by using plastic hammer.
- Install snap ring (which secures rotor pulley) by using external snap ring pliers.

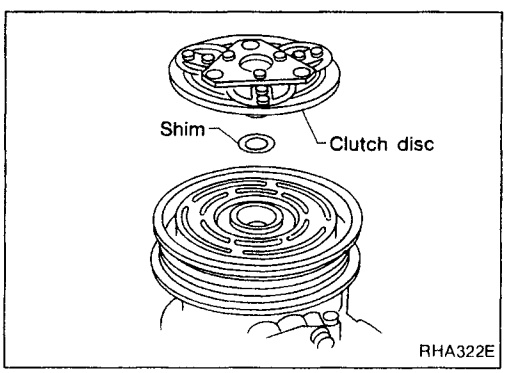

- Install the clutch disc on the drive shaft, together with the original shim(s). Press the disc down by hand.

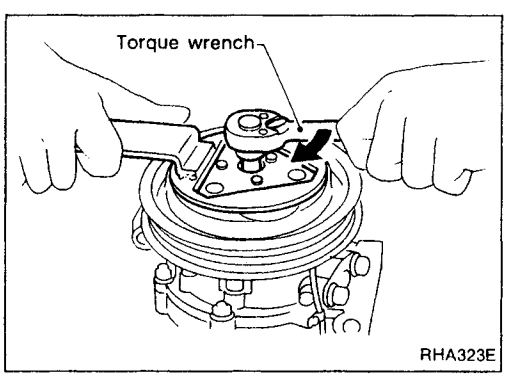

- Using the clutch wrench disc to prevent clutch disc rotation, tighten the bolt to 12 to 15 N·m (1.2 to 1.5 kg-m, 9 to 11 ft-lb) torque.

After tightening the bolt, check that the pulley rotates smoothly.

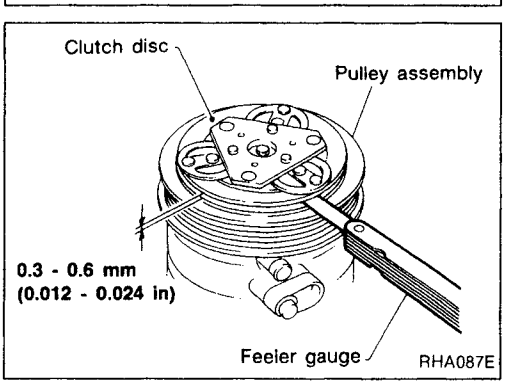

- Check clearance around the entire periphery of clutch disc.
  Disc-to-pulley clearance:
  0.3 - 0.6 mm (0.012 - 0.024 in)
  If the specified clearance is not obtained, replace adjusting spacer and readjust.

BREAK-IN OPERATION

When replacing compressor clutch assembly, do not forget break-in operation, accomplished by engaging and disengaging the clutch about thirty times. Break-in operation raises the level of transmitted torque.

Thermal Protector

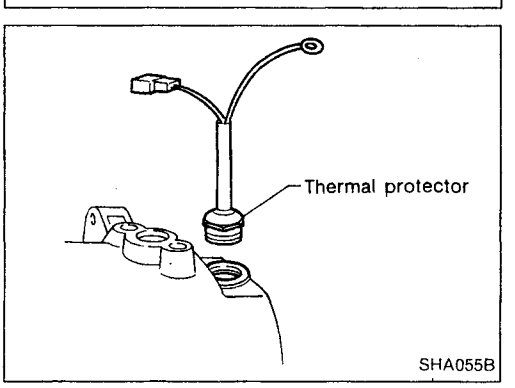

INSPECTION

- When servicing, do not allow foreign matter to get into compressor.
- Check continuity between two terminals.

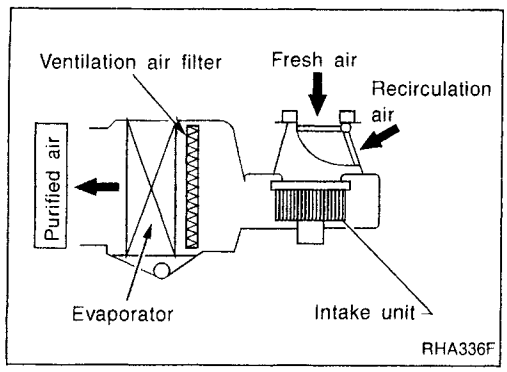

Ventilation Air Filter

FUNCTION

Air inside passenger compartment is kept clean at either recirculation or fresh mode by installing ventilation air filter into cooling unit.

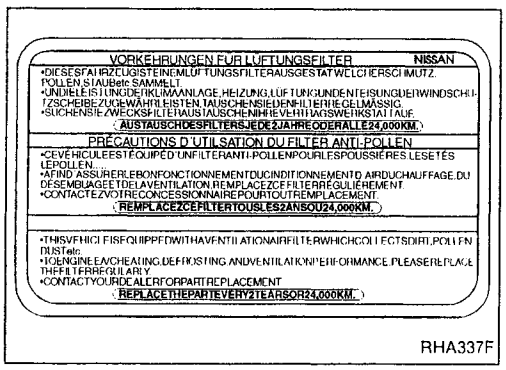

REPLACEMENT TIMING

Replace ventilation air filter every 2 years or 24,000 km (15,000 miles).
Caution label is fixed inside the glove box.

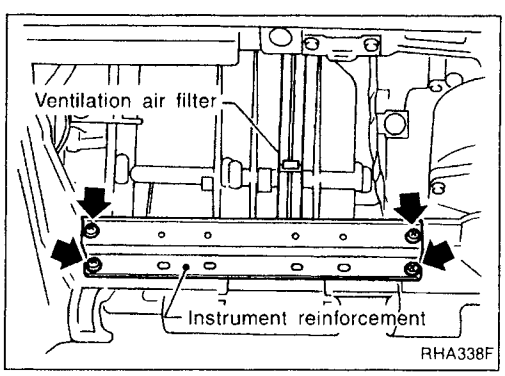

REPLACEMENT PROCEDURES

- Remove glove box which is secured with two clips.
- Remove instrument reinforcement from instrument panel.

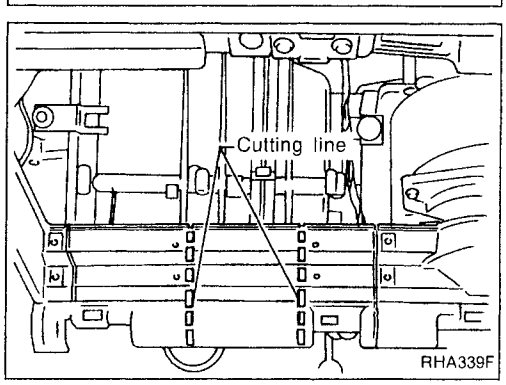

- Cut instrument panel as shown at left to remove ventilation air filter.

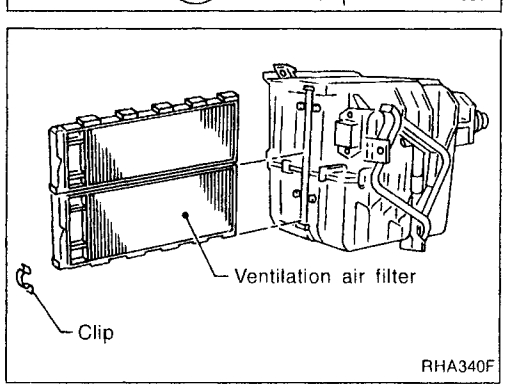

- Take out ventilation air filter which is secured with one clip, from cooling unit.
- Replace with new one and reinstall instrument reinforcement on instrument panel.
- Reinstall glove box.

HA

General Specifications

COMPRESSOR

Model	SR20DE engine	GA14DE engine	GA15DE, GA16DE and CD20 engines
	CALSONIC make CR-14	ZEXEL make DKV-14D	ZEXEL make DKV-11D
Type	Vane rotary		
Displacement cm^3 (cu in)/Rev	144 (8.79)	140 (8.54)	110 (6.71)
Direction of rotation	Clockwise (Viewed from drive end)		
Drive belt	GA engine model: Poly V SR engine model: Poly V CD engine model: Type A		

LUBRICANT

Model	ZEXEL make DKV-11D DKV-14D	CALSONIC make CR-14
Name	Nissan A/C System Oil Type R	
Part number	KLH00-PAGR0	
Capacity mℓ (Imp fl oz)		
Total in system	200 (7.0)	180 (6.3)
Compressor (Service parts) charging amount	200 (7.0)	180 (6.3)

REFRIGERANT

Type	HFC-134a
Capacity kg (lb)	
RHD models (Except Australia)	0.45 - 0.55 (0.99 - 1.21)
Australia (SR20DE engine)	0.50 - 0.60 (1.10 - 1.32)
Australia (GA16DE engine) and LHD models for Europe	0.60 - 0.70 (1.32 - 1.54)

Inspection and Adjustment

ENGINE IDLING SPEED

When A/C is ON
Refer to EC section.

BELT TENSION

Refer to Checking Drive Belts (MA section).

COMPRESSOR

Model	DKV-11D, DKV-14D and CR-14
Clutch disc-to-pulley clearance mm (in)	0.3 - 0.6 (0.012 - 0.024)